DIRECT-VENT FIREPLACE
OWNER'S OPERATION AND INSTALLATION MANUAL

We recommend that our products be installed and serviced by professionals who are certified in the U.S. by NFI (National Fireplace Institute).
www.nficertified.org

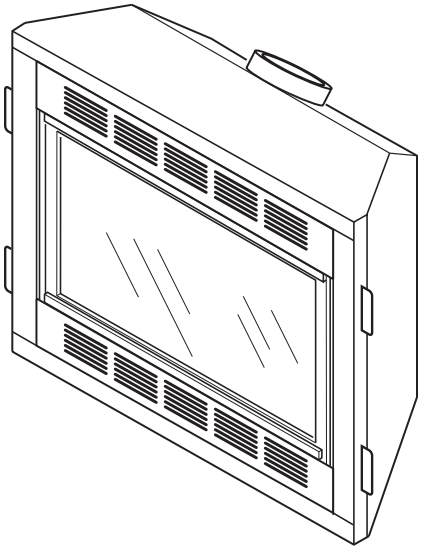

NATURAL GAS "TUDOR" MODELS (V)T32EN-A SERIES
PROPANE/LP GAS "TUDOR" MODELS (V)T32EP-A SERIES

WARNING: If the information in this manual is not followed exactly, a fire or explosion may result causing property damage, personal injury or loss of life.

FOR YOUR SAFETY
Do not store or use gasoline or other flammable vapors and liquids in the vicinity of this or any other appliance.

FOR YOUR SAFETY
WHAT TO DO IF YOU SMELL GAS
- **Do not try to light any appliance.**
- **Do not touch any electrical switch**
- **Do not use any phone in your building.**
- **Immediately call your gas supplier from a neighbor's phone. Follow the gas supplier's instructions.**
- **If you cannot reach your gas supplier, call the fire department.**

WARNING: Improper installation, adjustment, alteration, service or maintenance can cause injury or property damage. Refer to this manual for correct installation and operational procedures. For assistance or additional information consult a qualified installer, service agency or the gas supplier.

Installation and service must be performed by a qualified installer, service agency or the gas supplier.

This appliance may be installed in an aftermarket*, permanently located, manufactured (mobile) home, where not prohibited by state or local codes.
This appliance is only for use with the type of gas indicated on the rating plate. This appliance is not convertible for use with other gases, unless a certified kit is used.

***Aftermarket: Completion of sale, not for purpose of resale, from the manufacturer.**

Save this manual for future reference.
For more information, visit www.desatech.com

TABLE OF CONTENTS

SAFETY INFORMATION....2
PRODUCT IDENTIFICATION....3
LOCAL CODES....3
PRODUCT FEATURES....4
PRE-INSTALLATION PREPARATION....4
LOCATION OF TERMINATION CAP....6
VENTING INSTALLATION INSTRUCTIONS....7
FIREPLACE INSTALLATION....16
WIRING DIAGRAM....23
OPERATING FIREPLACE....23
INSPECTING BURNERS....25
CLEANING AND MAINTENANCE....25
TROUBLESHOOTING....27
REPLACEMENT PARTS....29
SPECIFICATIONS....29
SERVICE HINTS....29
TECHNICAL SERVICE....29
ILLUSTRATED PARTS BREAKDOWN AND PARTS LIST....30
ACCESSORIES....34
OWNER'S REGISTRATION FORM....35
WARRANTY INFORMATION.... Back Cover

SAFETY INFORMATION

⚠ WARNING: This product contains and/or generates chemicals known to the State of California to cause cancer or birth defects or other reproductive harm.

IMPORTANT: Read this owner's manual carefully and completely before trying to assemble, operate or service this fireplace. Improper use of this fireplace can cause serious injury or death from burns, fire, explosions, electrical shock and carbon monoxide poisoning.

⚠ DANGER: Carbon monoxide poisoning may lead to death!

This fireplace must be installed by a qualified (certified or licensed) service person. It has a sealed gas combustion chamber that uses a coaxial pipe (pipe within a pipe and having the same center) venting system. It brings in fresh air for combustion through the outer pipe and combustion gases are exhausted through the inner pipe. If the glass door assembly and venting pipe are not properly seated, connected and sealed, carbon monoxide leakage (spillage) can occur.

Carbon Monoxide Poisoning: Early signs of carbon monoxide poisoning resemble the flu, with headaches, dizziness or nausea. If you have these signs, the fireplace may not have been installed properly. **Get fresh air at once!** Have fireplace inspected and serviced by a qualified service person. Some people are more affected by carbon monoxide than others. These include pregnant women, people with heart or lung disease or anemia, those under the influence of alcohol and those at high altitudes.

Propane/LP and Natural Gas: Propane/LP and natural gases are odorless. An odor-making agent is added to the gas. The odor helps you detect a gas leak. However, the odor added to the gas can fade. Gas may be present even though no odor exists.

Make certain you read and understand all warnings. Keep this manual for reference. It is your guide to safe and proper operation of this fireplace.

⚠ WARNING: Any change to this fireplace or its controls can be dangerous.

1. This appliance is only for use with the type of gas indicated on the rating plate. This appliance is not convertible for use with other gases unless a certified kit is used.
2. For propane/LP fireplace, do not place propane/LP supply tank(s) inside any structure. Locate propane/LP supply tank(s) outdoors. To prevent performance problems, do not use propane/LP fuel tank of less than 100 lbs. capacity.
3. If you smell gas
   - shut off gas supply
   - do not try to light any appliance
   - do not touch any electrical switch; do not use any phone in your building
   - immediately call your gas supplier from a neighbor's phone. Follow the gas supplier's instructions
   - if you cannot reach you gas supplier, call the fire department.
4. Never install the fireplace
   - in a recreational vehicle
   - in windy or drafty areas where curtains or other combustible (flammable) objects can make contact with the fireplace front
   - in high traffic areas

SAFETY INFORMATION
Continued

5. This fireplace reaches high temperatures. Keep children and adults away from hot surfaces to avoid burns or clothing ignition. Fireplace will remain hot for a time after shutdown. Allow surfaces to cool before touching.
6. Carefully supervise young children when they are in the room with fireplace.
7. Do not modify this fireplace under any circumstances. Any parts removed for servicing must be replaced prior to operating fireplace.
8. Turn fireplace off and let cool before servicing, installing or repairing. Only a qualified service person should install, service or repair this fireplace. Have fireplace inspected annually by a qualified service person.
9. You must keep control compartments, burners and circulating air passages clean. More frequent cleaning may be needed due to excessive lint and dust from carpeting, bedding material, etc. Turn off the gas valve and pilot light before cleaning fireplace.
10. Have venting system inspected annually by a qualified service person. If needed, have venting system cleaned or repaired. See *Cleaning and Maintenance,* page 25.
11. Keep the area around your fireplace clear of combustible materials, gasoline and other flammable vapor and liquids. Do not run fireplace where these are used or stored. Do not place items such as clothing or decorations on or around fireplace.
12. Do not use this fireplace to cook food or burn paper or other objects.
13. Do not use any solid fuels (wood, coal, paper, cardboard, etc.) in this fireplace. Use only the gas type indicated on fireplace nameplate.
14. This appliance, when installed, must be electrically grounded in accordance with local codes or, in the absence of local codes, with the *National Electrical Code, ANSI/NFPA 70 or the Canadian Electrical Code, CSA C22.1*.
15. Do not use fireplace if any part has been exposed to or under water. Immediately call a qualified service person to arrange for replacement of the unit.
16. Do not operate fireplace if any log is broken.
17. Do not use a blower insert, heat exchanger insert or other accessory not approved for use with this fireplace.
18. Do not operate fireplace with glass door removed, cracked or broken.
19. Provide adequate clearances around air openings.

PRODUCT IDENTIFICATION

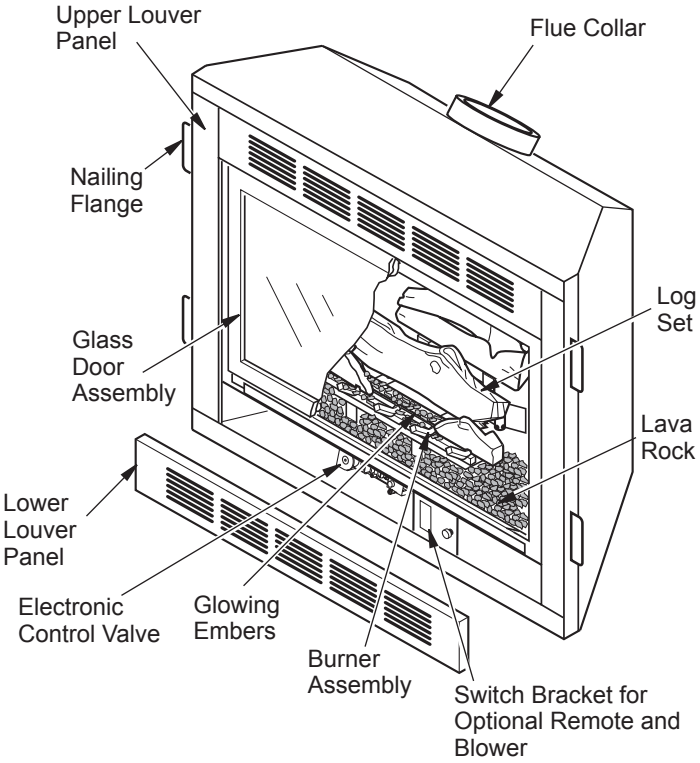

Figure 1 - Direct-Vent Fireplace with Electronic Ignition

LOCAL CODES

Install and use fireplace with care. Follow all local codes. In the absence to local codes, use the current *National Fuel Gas Code ANSI Z223.1/NFPA 54** (USA) or the current *CSA-B149.1 Installation Code* (Canada).

*Available from:

American National Standards Institute, Inc.
1430 Broadway
New York, NY 10018
National Fire Protection Association, Inc.
Batterymarch Park
Quincy, MA 02269

PRODUCT FEATURES

These are a few facts that can help you understand and enjoy your direct-vent fireplace:

- The venting system may be routed to the outside of your home in several ways. It may vent through the roof (vertical) or it may vent to an outside/exterior wall (horizontal). The vent pipe installation is very important to allow for proper operation. You must follow the venting instructions very carefully for either vertical or horizontal applications.
- This fireplace may be installed in any room of your house provided all local codes and these installation instructions are followed.
- The blower requires electricity if installed. If you plan to install the blower at a later date, do not forget to wire the outlet at the bottom of the fireplace when framing.
- The electronic ignition creates spark to ignite the pilot light. It does not require any matches, batteries or any other sources of ignition to light the pilot.
- Each time you turn on your fireplace, you may notice some amount of condensation on the inside of the fireplace glass. This is normal and will disappear after 10-20 minutes of operation.
- Your direct-vent gas fireplace system (fireplace and venting) is a balanced and sealed gas operating unit. It requires approximately 10-20 minutes of operating time before the flame pattern stabilizes.
- Your fireplace is designed to be used in zero clearance installations. Wall or framing material can be placed directly against any exterior surface on the back, sides or top of your fireplace, except where standoff spacers are integrally attached. If standoff spacers are attached to your fireplace, these spacers can be placed directly against wall or framing material. See framing details on page 5.
- If you plan on installing a television or entertainment center recessed above your fireplace, it is recommended that you maintain a minimum 18" above top of louver opening.
- When locating termination cap, it is important to observe the minimum clearances shown in Figure 7, page 6.
- If recessing into a wall, you can avoid extra framing by positioning your fireplace against an already existing framing member.
- Do not recess termination cap into a wall or siding.
- You may paint the termination cap with 450ºF (232ºC) heat-resistant paint to coordinate with the exterior finish.
- There must not be <u>any</u> obstruction such as bushes, garden sheds, fences, decks or utility buildings within 24" from the front of the termination cap.
- Do not locate termination cap where excessive snow or ice build up may occur. Be sure to clear vent termination area after snow falls to prevent accidental blockage of venting system. When using snow blowers, do not direct snow towards vent termination area.

PRE-INSTALLATION PREPARATION

LOCATION AND SPACE REQUIREMENTS

Determine the safest and most efficient location for your DESA direct-vent fireplace. Make sure that rafters and wall studs are not in the way of the venting system. Choose a location where the heat output is not affected by drafts, air conditioning ducts, windows or doors. Figure 2 shows some common locations. Be aware of all restrictions and precautions before deciding the exact location for your fireplace and termination cap.

When deciding the location of your fireplace, follow these rules:

- Do not connect this fireplace venting to a chimney flue serving a separate solid-fuel burning fireplace or appliance.
- Due to high temperatures, do not locate this fireplace in high traffic areas, windy or drafty areas or near furniture or draperies.
- Proper clearances must be maintained.
- If your fireplace is to be installed directly on carpeting, vinyl tile or any combustible material other than wood, it must be installed on a metal or wood panel extending the full width and depth of the fireplace. See Figure 3.

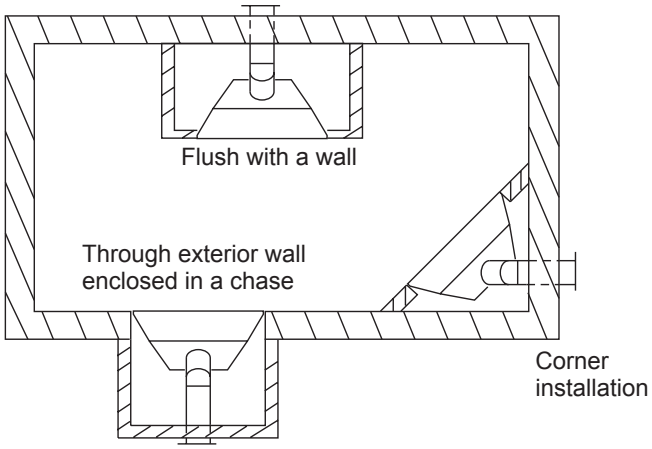

Figure 2 - Common Fireplace Locations

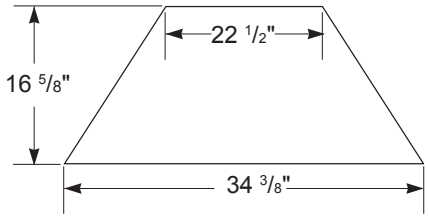

Figure 3 - Fireplace Bottom Dimensions

PRE-INSTALLATION PREPARATION
Continued

CLEARANCES

Minimum clearances to combustibles for the fireplace are as follows:

*Back and sides	0"/mm
Perpendicular walls	6" (152 mm)
Floor	0"/mm
Ceiling to louver opening	42" (1067 mm)
Front	36" (914 mm)
Top	0"/mm
Vent	(See venting instructions for specific venting clearances.)

Combustible material with a maximum thickness of 5/8" may be flush with the top front of fireplace.

* For back and sides of fireplace, do not pack with insulation or other materials. Zero inch clearance to combustible materials are for framing purpose only.

NOTICE: This fireplace is intended for use as supplemental heat. Use this fireplace along with your primary heating system. Do not install this fireplace as your primary heat source. If you have a central heating system, you may run system's circulating blower while using fireplace. This will help circulate the heat throughout the house. In the event of a power outage, you can use this fireplace as a heat source.

FRAMING AND FINISHING

Figure 4 shows typical framing of this fireplace. Figure 5 shows framing for corner installation. All minimum clearances must be met.

For available accessories for this fireplace, see *Accessories* on page 34. If you are using a separate combustible mantel piece, refer to Figure 6 for proper installation height. You can install noncombustible mantels at any height above the fireplace. *Note:* Noncombustible mantels may discolor!

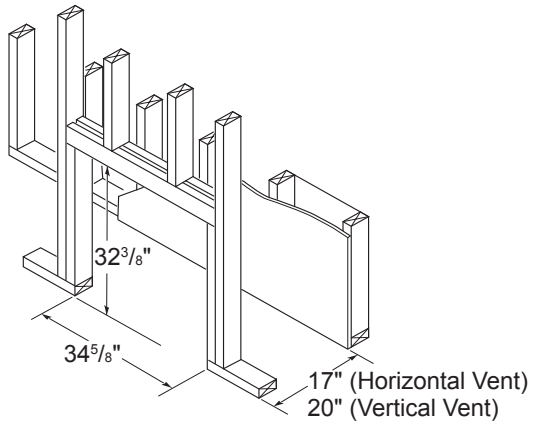

Figure 4 - Framing Clearances for Installation Against an Exterior Wall

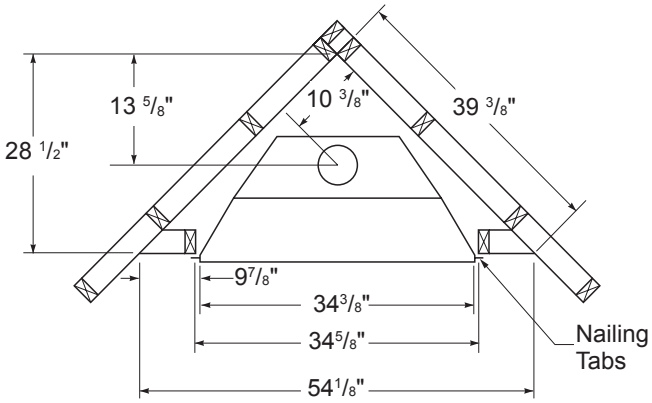

Figure 5 - Framing Clearances for Corner Installation

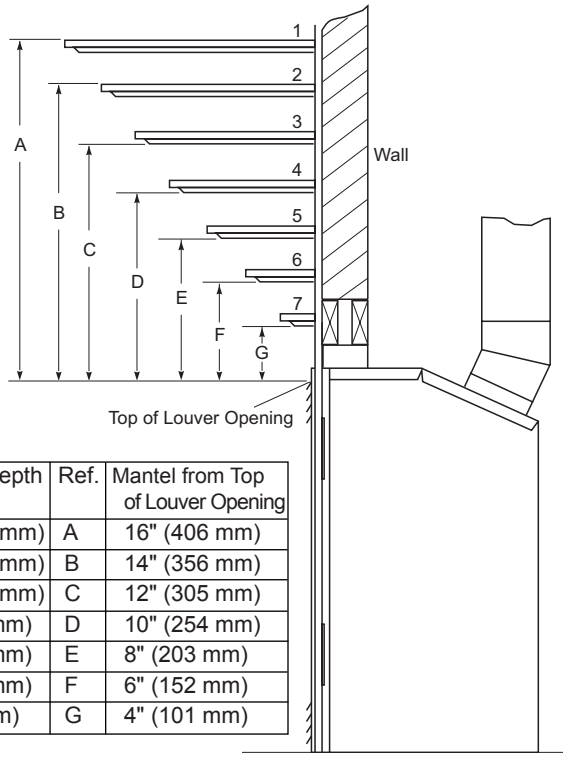

Ref.	Mantel Depth	Ref.	Mantel from Top of Louver Opening
1	14" (356 mm)	A	16" (406 mm)
2	12" (305 mm)	B	14" (356 mm)
3	10" (254 mm)	C	12" (305 mm)
4	8" (203 mm)	D	10" (254 mm)
5	6" (152 mm)	E	8" (203 mm)
6	4" (101 mm)	F	6" (152 mm)
7	2" (51 mm)	G	4" (101 mm)

Figure 6 - Clearances for Combustible Mantels

LOCATION OF TERMINATION CAP

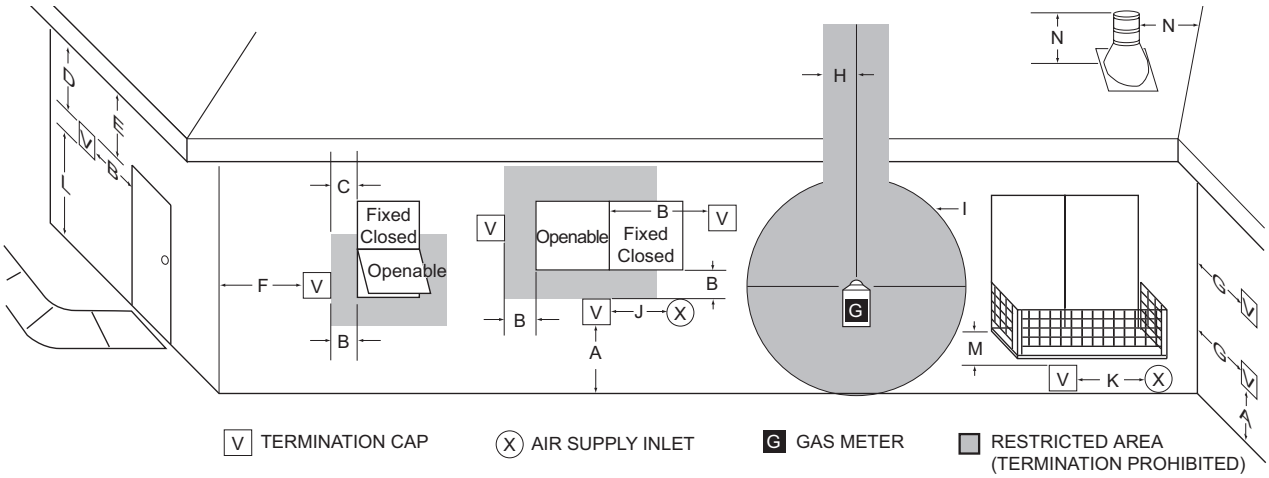

A = clearance above grade, veranda, porch, deck, or balcony [*12 inches (30.5mc) minimum]
B = clearance to window or door that may be opened [12 inches (30.5cm) minimum]
C = clearance to permanently closed window [minimum 12 inches (30.5cm) recommended to prevent condensation on window]
D = vertical clearance to ventilated soffit located above the terminal within a horizontal distance of 24 inches (61cm) from the center-line of the terminal [18 inches (45.7cm) minimum]
E = clearance to unventilated soffit [12 inches (30.5cm) minimum]
F = clearance to outside corner (see below)
G = clearance to inside corner (see below)
H = *not to be installed above a meter/regulator assembly within 36 inches (91.4cm) horizontally from the center-line of the regulator
I = clearance to service regulator vent outlet [*72 inches (182.9cm) minimum]
J = clearance to non-mechanical air supply inlet to building or the combustion air inlet to any other fireplace [*12 inches (30.5cm) minimum]
K = clearance to a mechanical air supply inlet [*72 inches (182.9cm) minimum]
L = † clearance above paved side-walk or a paved driveway located on public property [*84 inches (213.3cm) minimum]
M = clearance under veranda, porch, deck [*12 inches (30.5cm) minimum ‡]
N = clearance above a roof shall extend a minimum of 24 inches (61cm) above the highest point when it passes through the roof surface and any other obstruction within a horizontal distance of 18 inches (45.7cm)

† vent shall not terminate directly above a side-walk or paved driveway which is located between two single family dwellings and serves both dwellings*
‡ only permitted if veranda, porch, deck or balconey is fully open on a minimum of 2 sides beneath the floor*
* as specified in CAN/CSA B149 (.1 or .2) Installation Codes (1991) for Canada and U.S.A.
Note: Local codes or regulations may require different clearances

Termination Clearances for Buildings with Combustible and Noncombustible Exteriors

Inside Corner

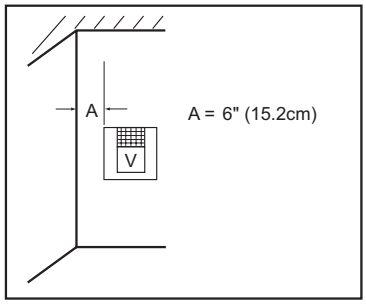

Outside Corner

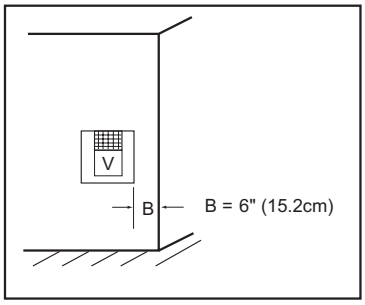

Recessed Location

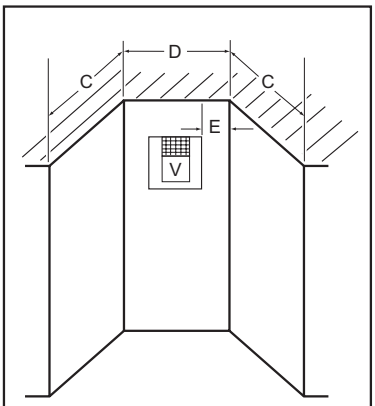

C = Maximum depth of 48" (121.9cm) for recessed location
D = Minimum width for back wall of recessed location -
Combustible - 38" (965mm)
Noncombustible - 24" (61cm)
E = Clearance from corner in recessed location-
Combustible - 6" (15.2cm)
Noncombustible - 2" (5.1cm)

Balcony with No Side Wall

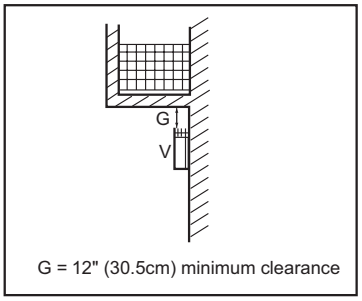

Balcony with Perpendicular Side Wall

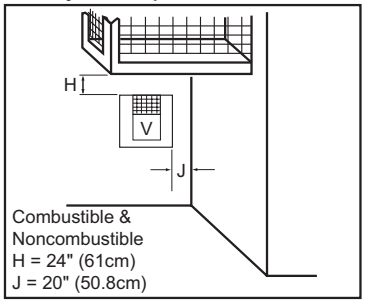

Figure 7 - Minimum Clearances for Termination Cap

VENTING INSTALLATION INSTRUCTIONS

NOTICE: Read these instructions completely before attempting installation.

These models are tested and approved for use with DESA (direct-vent) pipe components and terminations.

The venting system must terminate on the outside of the structure and can not be attached to a chimney or flue system serving a separate solid fuel or gas burning appliance. A direct-vent appliance must have its own venting system. DO NOT common vent this appliance.

These models are approved to be vented either horizontally through an outside wall or vertically through a roof or chase enclosure using the following guidelines:

- When venting system terminates horizontally on an outside wall, you may install a standoff if the termination cap is to be installed directly on a combustible finish such as vinyl, wood, stucco, etc.
- Never run the vent downward as this may cause excessive temperatures which could cause a fire.
- Vent pipe air space clearances to combustibles are 1" on all sides except on the horizontal sections, which requires 2" clearance from the top of the pipe. Where the termination cap penetrates a combustible wall, 1" air space clearance is required.
- Snorkel terminations are required when minimum clearance to grade cannot be met (see Figure 16 on page 11).
- Have fireplace and selected vent components on hand to help determine the exact measurements when elbowing or offsetting. Always use wall firestops when penetrating walls and firestops when penetrating ceilings or attic spaces.
- Install horizontal venting with a 1/4" rise for every 12" of run toward the termination.

⚠ WARNING: Read all instructions completely and thoroughly before attempting installation. Failure to do so could result in serious injury, property damage or loss of life.

NOTICE: Failure to follow these instructions will void the warranty.

IMPORTANT: Do not seal vent cap to pipe. Cap must be removable for service.

INSTALLATION PRECAUTIONS

- **Wear gloves and safety glasses for protection**
- **Use extreme caution when using ladders or when on roof tops**
- **Be aware of electrical wiring locations in walls and ceilings**

The following actions will void the warranty on your venting system:

- **Installation of any damaged venting component**
- **Unauthorized modification of the venting system (Do not cut or alter vent components)**
- **Installation of any component part not manufactured or approved by DESA**
- **Installation other than as instructed by these instructions**

⚠ WARNING: This gas fireplace and vent assembly must be vented directly to the outside. The venting system must NEVER be attached to a chimney serving a separate solid fuel burning appliance. Each direct-vent gas appliance must use a separate vent system. Do not use common vent systems.

⚠ WARNING: Vent pipe air space clearances to combustibles are 1" on all sides except on the horizontal sections, which require 2" clearances from the top of the pipe. Where the termination cap penetrates a combustible wall, 1" air space clearance is required.

INSTALLATION PLANNING

There are two basic types of direct-vent installation:

- Horizontal Termination
- Vertical Termination

Horizontal Termination Installation

IMPORTANT: Horizontal square terminations require only inner portion of wall firestop. Horizontal installations using round termination require exterior portion of wall firestop (see Figure 14, page 10).

1. Set the fireplace in its desired location and determine the route your horizontal venting will take. Do not secure the fireplace until all venting has been installed. Some installations require sliding the fireplace in and out of position to make final venting connections. Figures 14 through 18 on pages 10 through 12 show different configurations for venting with horizontal termination that will help you decide which application best suits your installation. Check to see if wall studs or roof rafters are in the path of your desired venting route. If they are, you may want to adjust the location of the fireplace.

VENTING INSTALLATION INSTRUCTIONS
Continued

2. Direct vent pipe sections and components are designed with special twist-lock connections.

   Twist-Lock Procedure: The female ends of the pipes have locking lugs (indentations). These lugs will slide straight into matching slots on the male ends of adjacent pipes. Push pipe sections together and twist one section clockwise approximately one-quarter turn until the sections are fully locked (see Figure 8). *Note:* Horizontal runs of vent must be supported every three feet. Use wall straps for this purpose.
3. Use a 45° elbow to connect venting system to fireplace flue collar. The elbow is designed to be twist-locked onto the flue collar as described in step 2. *IMPORTANT:* Do not attempt to alter the configuration of the elbow by cutting, twisting, bending, etc.
4. Assemble the desired combination of pipe and elbows to the fireplace flue collar. If there are long portions of venting run, pre-assembled pipe sections may be installed as subassemblies for convenience.
5. Carefully determine the location where the vent pipe assembly will penetrate the outside wall. The center of the hole should line up with the center-line of the horizontal vent pipe. Mark the wall for a 10 3/4" x 10 3/4" square hole. Cut and frame the square hole in the exterior wall where the vent will be terminated. If the wall being penetrated is constructed of noncombustible material, such as masonry block or concrete, a 8 1/2" hole with zero clearance is acceptable (see Figure 9).

⚠ WARNING: Do not recess vent termination into any wall. This will cause a fire hazard.

6. **Noncombustible Exterior Wall:** Position the horizontal vent cap in the center of the 8 1/2" round hole and attach to the exterior wall with four screws. *Note:* The four wood screws provided should be replaced with appropriate fasteners for stucco, brick, concrete or other types of sidings. Before attaching the vent cap to exterior wall, run a bead of non-hardening mastic (pliable sealant) around the outside edges to make a seal between it and the outside wall.

   Combustible Exterior Wall: For vinyl siding, stucco or wood exteriors, a siding standoff may be installed between the vent cap and exterior wall. The siding standoff prevents excessive heat from damaging the siding materials. Siding material must be cut to accommodate standoff. Bolt the vent cap to the standoff. Apply non-hardening mastic around outside edge of standoff. Position the standoff/cap assembly in the center of the 10 3/4" square hole and attach to exterior wall with wood screws provided (see Figure 11, page 9). The siding standoff must sit flush against the exterior fascia material.

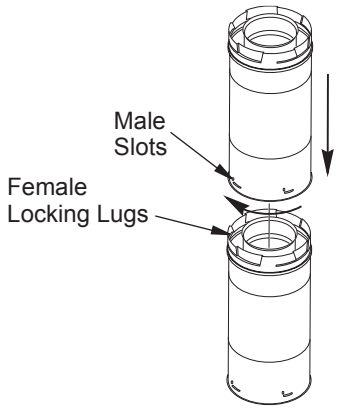

Figure 8 - Vent Pipe Connections

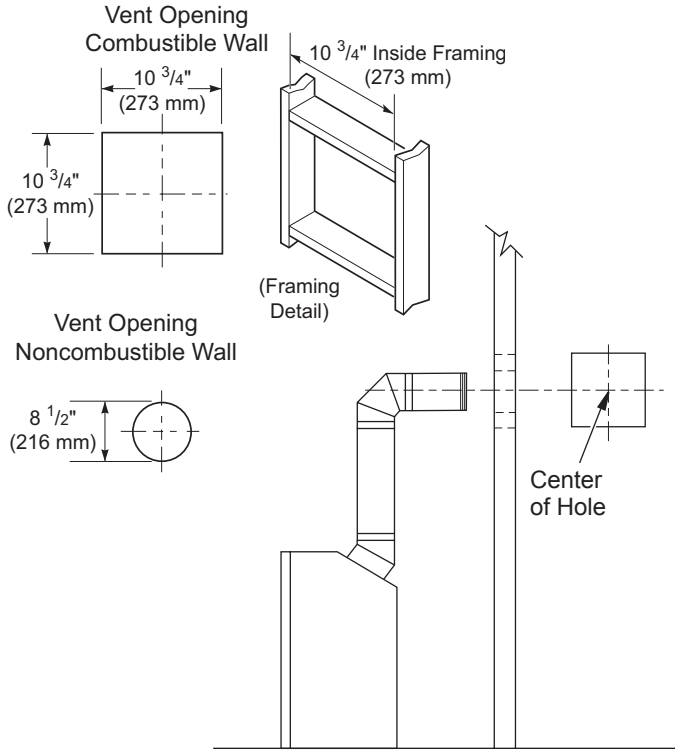

Figure 9 - Vent Opening Requirements

VENTING INSTALLATION INSTRUCTIONS
Continued

7. **Combustible Exterior Wall Only:** Slide the wall firestop over the vent pipe before connecting horizontal run to vent cap (see Figure 12).
8. Carefully move fireplace, with vent assembly attached, toward wall and insert vent pipe into horizontal termination. The pipe overlap should be a minimum of 1¼" (see Figure 13).
9. **Combustible Exterior Wall Only:** Slide wall firestop against interior wall surface and attach with screws provided (see Figure 12). See Figure 13 for horizontal termination details.
10. Place fireplace into position and shim with noncombustible material if needed. Nail or screw side flanges to framing to secure unit in place. *IMPORTANT:* Make sure fireplace is level before securing. If fireplace is not level it will not work properly.

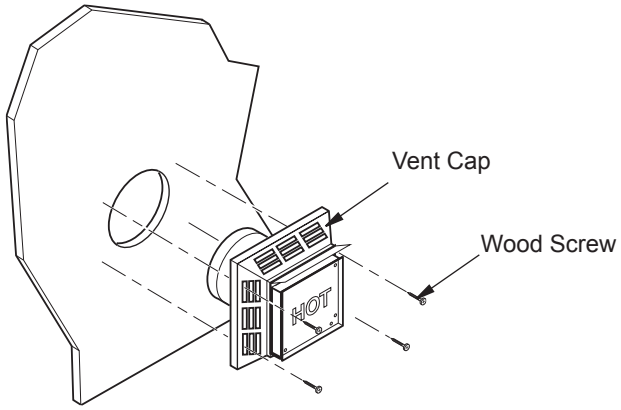

Figure 10 - Installing Horizontal Vent Cap (Noncombustible Exterior)

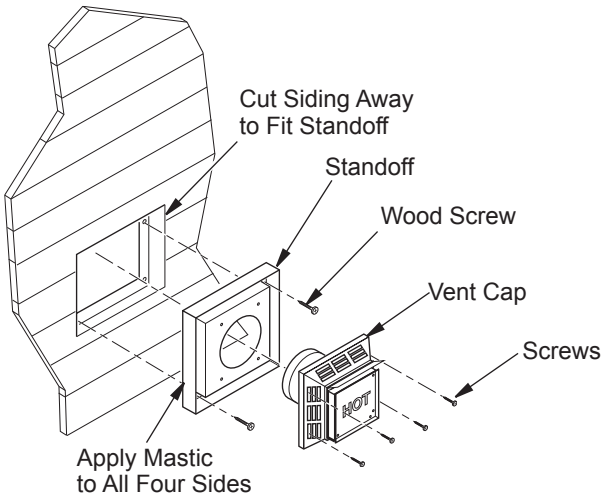

Figure 11 - Installing Siding Standoff (Combustible Exterior)

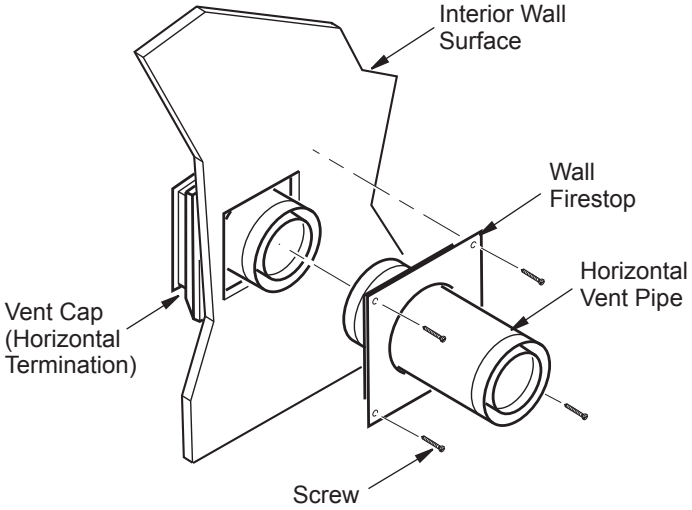

Figure 12 - Connecting Vent Cap with Horizontal Vent Pipe

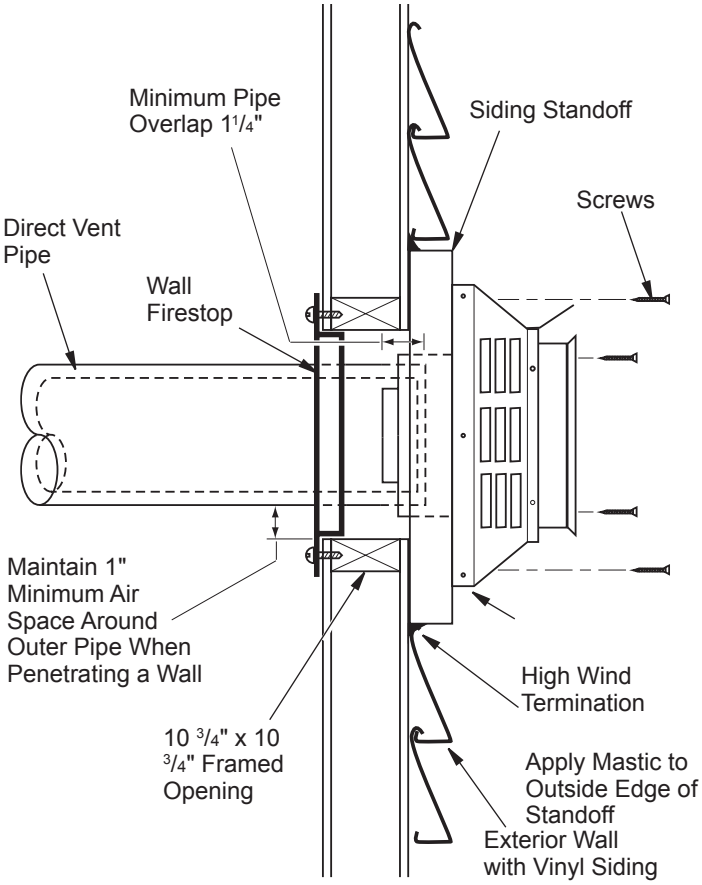

Figure 13 - Typical Horizontal Termination Cap Mounting with Additional Siding Standoff Installed

VENTING INSTALLATION INSTRUCTIONS
Continued

Horizontal Termination Configurations

Figures 14 through 18 show different configurations and alternatives for venting with horizontal termination. Each figure includes a chart with critical minimum and maximum dimensions which MUST be met. *IMPORTANT:* Remember that a horizontal run of venting must have a 1/4" rise for every 12" of run toward the termination.

⚠ WARNING: Never run vent downward as this may cause excessive temperatures which could cause a fire. Operation of improperly installed and maintained venting system could result in serious injury, property damage or loss of life.

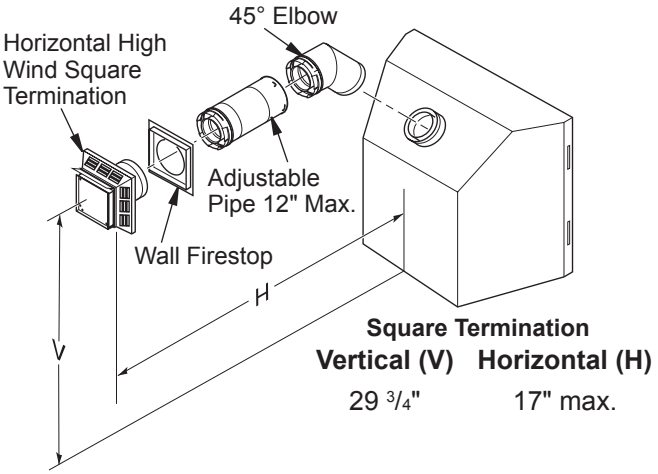

Square Termination

Vertical (V)	Horizontal (H)
29 3/4"	17" max.

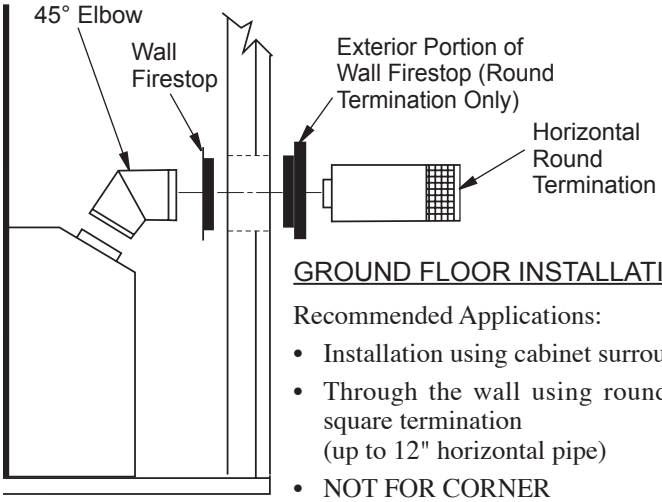

GROUND FLOOR INSTALLATION

Recommended Applications:

- Installation using cabinet surrounds
- Through the wall using round or square termination (up to 12" horizontal pipe)
- NOT FOR CORNER INSTALLATION

Figure 14 - Horizontal Termination Configuration for Square or Round Termination

CORNER INSTALLATION

Recommended Applications:

- Corner ground floor installation
- Ground floor installation where pipe vents horizontally through wall (over 12" horizontal pipe)
- Basement installation where one foot clearance from ground to termination is possible

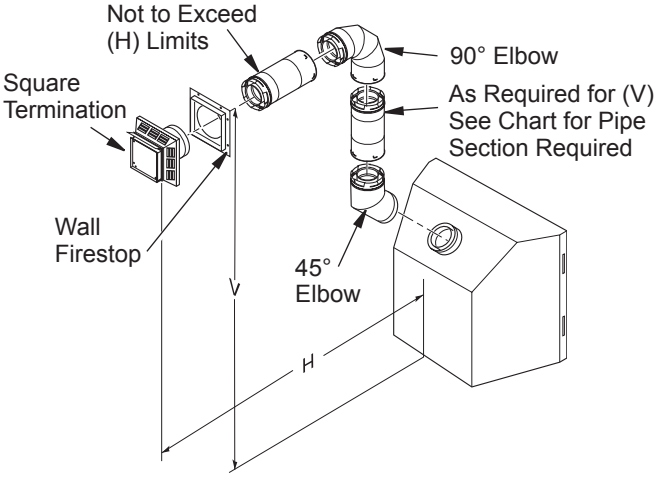

Vertical (V)	Vertical (V) Vertical Pipe	Required Horizontal (H)
*43 3/4" min.	None	30" max.
53 3/4" min.	1 ft.	48" max.
65 3/4" min.	2 ft.	60" max.
77 3/4" min.	3 ft.	84" max.
89 3/4" min.	4 ft.	20' max.

* Ground Floor Corner Venting

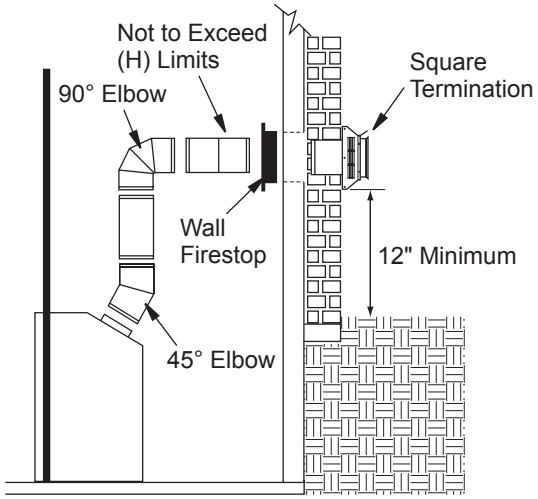

Figure 15 - Horizontal Termination Configuration for Corner Installation Using One 90° Elbow

VENTING INSTALLATION INSTRUCTIONS
Continued

SNORKEL TERMINATION INSTALLATION

Recommended Applications:

- Installations requiring a vertical rise on building exterior
- Any installation using snorkel termination to achieve one foot above ground

Snorkel terminations are available for installations requiring a vertical rise on the exterior of the building. If installing snorkel termination below grade, you must provide proper drainage to prevent water from entering snorkel termination (see Figure 16). Do not back fill around snorkel termination.

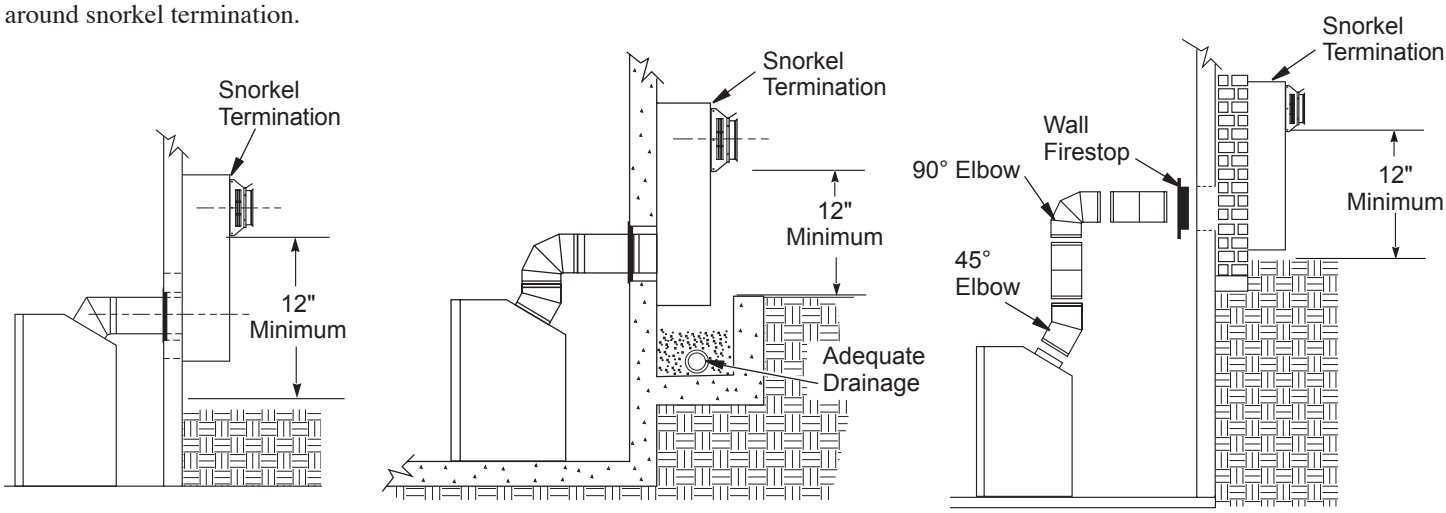

Figure 16 - Snorkel Termination Configurations for Below Ground Installation

HORIZONTAL SYSTEM INSTALLATION USING TWO 90° ELBOWS

The following configurations show the minimum vertical rise requirements for a horizontal system using two 90° elbows.

Venting with Two 90° Elbows

Vertical (V)	Horizontal (H_1)	Horizontal (H_1) + Horizontal (H_2)
5' min.	2' max.	6' max.
6' min.	4' max.	12' max.
7' min.	6' max.	18' max.
8' min.	8' max.	20' max.
20' max.	8' max.	20' max.

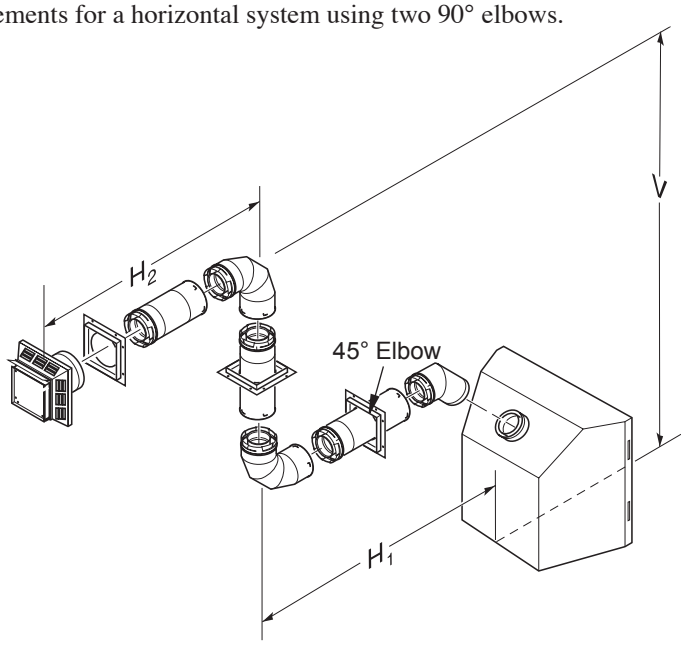

Figure 17 - Horizontal Termination Configuration for Venting Using Two 90° Elbows

VENTING INSTALLATION INSTRUCTIONS
Continued

Venting with Two 90° Elbows

Vertical (V)	Horizontal (H_1) + Horizontal (H_2)
5' min.	6' max.
6' min.	12' max.
7' min.	18' max.
8' min.	20' max.
20' max.	20' max.

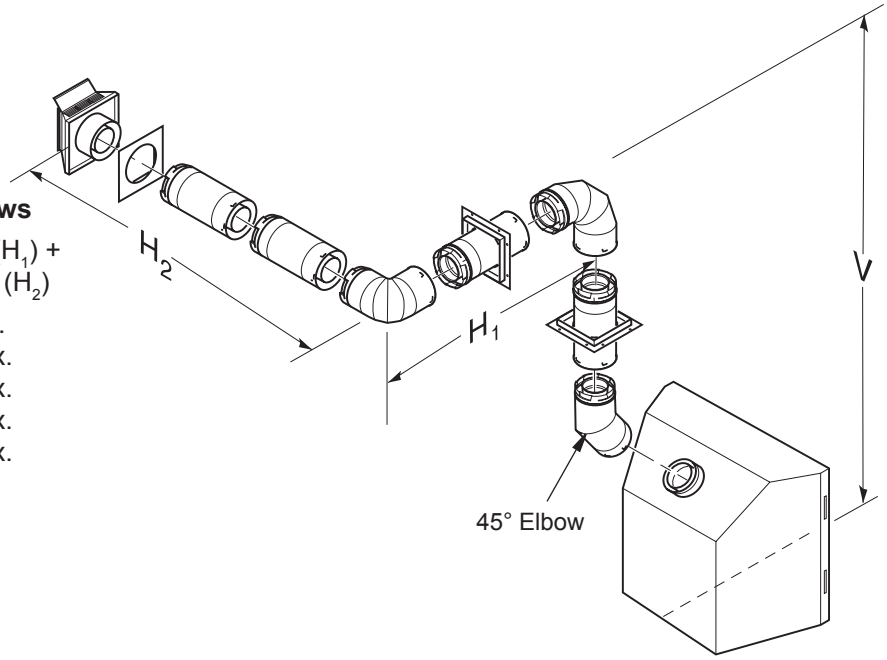

Figure 18 - Horizontal Termination Configuration for Venting Using Two 90° Elbows with Termination at 90° with Fireplace

INSTALLATION FOR VERTICAL TERMINATION

Note: Vertical restrictor must be installed in all vertical installations.

1. Determine the route your vertical venting will take. If ceiling joists, roof rafters or other framing will obstruct the venting system, consider an offset (see Figure 19) to avoid cutting load bearing members. *Note:* Pay special attention to these installation instructions for required clearances (air space) to combustibles when passing through ceilings, walls, roofs, enclosures, attic rafters, etc. Do not pack air spaces with insulation. Also note maximum vertical rise of the venting system and any maximum horizontal offset limitations.
2. Set the fireplace in desired location. Drop a plumb line down from the ceiling to the position of the fireplace exit flue. Mark the center point where the vent will penetrate the ceiling. Drill a small locating hole at this point.

   Drop a plumb line from the inside of the roof to the locating hole in the ceiling. Mark the center point where the vent will penetrate the roof. Drill a small locating hole at this point.

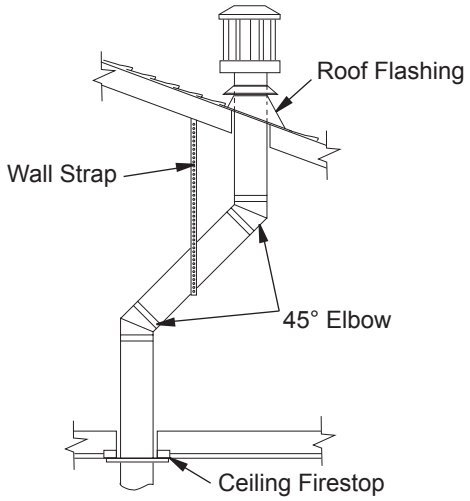

Figure 19 - Offset with Wall Strap and 45° Elbows

VENTING INSTALLATION INSTRUCTIONS
Continued

Flat Ceiling Installation

1. Cut a 10 3/4" square hole in the ceiling using the locating hole as a center point. The opening should be framed to 10 3/4"x10 3/4" (273 mm x 273 mm) inside dimensions, as shown in Figure 9 on page 8 using framing lumber the same size as the ceiling joists. If the area above the ceiling is an insulated ceiling or a room, nail firestop from the top side. This prevents loose insulation from falling into the required clearance space. Otherwise, install firestop below the framed hole. The firestop should be installed with no less than three nails per side (see Figure 20).
2. Assemble the desired lengths of pipe and elbows necessary to reach from the fireplace flue up through the firestop. Be sure all pipe and elbow connections are fully twist-locked (see Figure 8, page 8).
3. Cut a hole in the roof using the locating hole as a center point. (Cover any exposed open vent pipes before cutting hole in roof.) The 10 3/4"x10 3/4" hole must be measured on the horizontal; actual length may be larger depending on the pitch of the roof. There must be a 1" clearance from the vent pipe to combustible materials. Frame the opening as shown in Figure 9, page 8.
4. Connect a section of pipe and extend up through the hole.

   Note: If an offset is needed to avoid obstructions, you must support the vent pipe every 3 feet. Use wall straps for this purpose (see Figure 19, page 12). Whenever possible, use 45° elbows instead of 90° elbows. The 45° elbow offers less restriction to the flow of the flue gases and intake air.
5. Place the flashing over the pipe section(s) extending through the roof. Secure the base of the flashing to the roof and framing with roofing nails. Be sure roofing material overlaps the top edge of the flashing as shown in Figure 19, page 12. There must be a 1" clearance from the vent pipe to combustible materials.
6. Continue to add pipe sections until the height of the vent cap meets the minimum building code requirements described in Figure 7 on page 6. *Note:* You must increase vent height for steep roof pitches. Nearby trees, adjoining rooflines, steep pitched roofs and other similar factors may cause poor draft or down-drafting in high winds. Increasing the vent height may solve this problem.

If area above is a room or insulated area, install firestop above framed hole.

If area above is not a room, install firestop below framed hole.

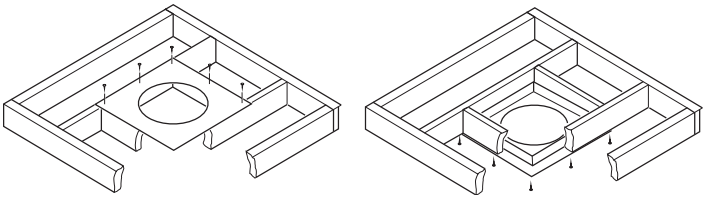

Figure 20 - Installing Firestop

7. Twist-lock the vent cap onto the last section of vent pipe.

Note: If the vent pipe passes through any occupied areas above the first floor, including storage spaces and closets, you must enclose pipe. You may frame and sheetrock the enclosure with standard construction material. Make sure and meet the minimum allowable clearances to combustibles. Do not fill any of the required air spaces with insulation.

Vertical Termination Configurations

Figures 21 through 24 show four different configurations for vertical termination.

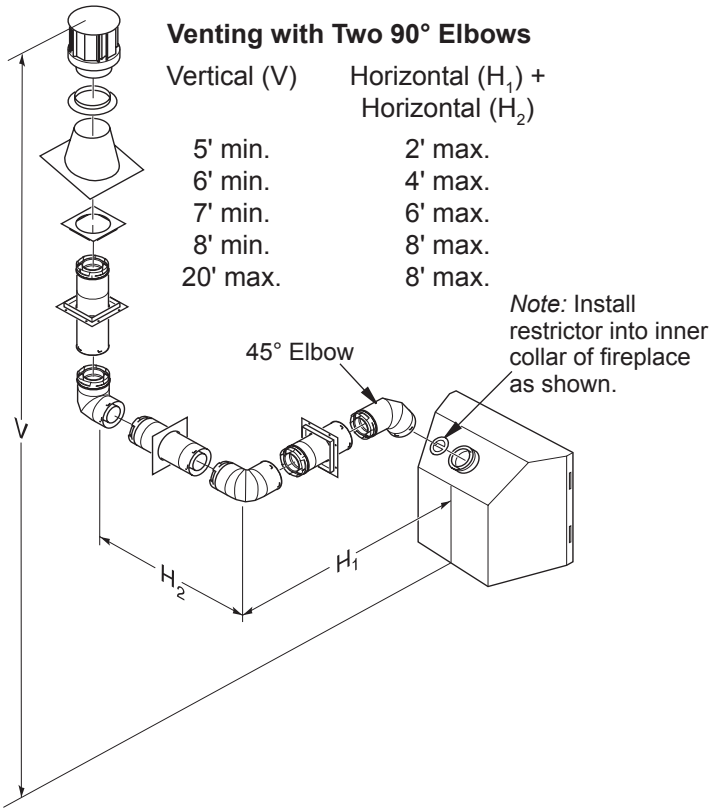

Figure 21 - Vertical Venting Configuration Using Two 90° Elbows with Two Horizontal Runs (Vertical Round High Wind Termination Shown)

VENTING INSTALLATION INSTRUCTIONS
Continued

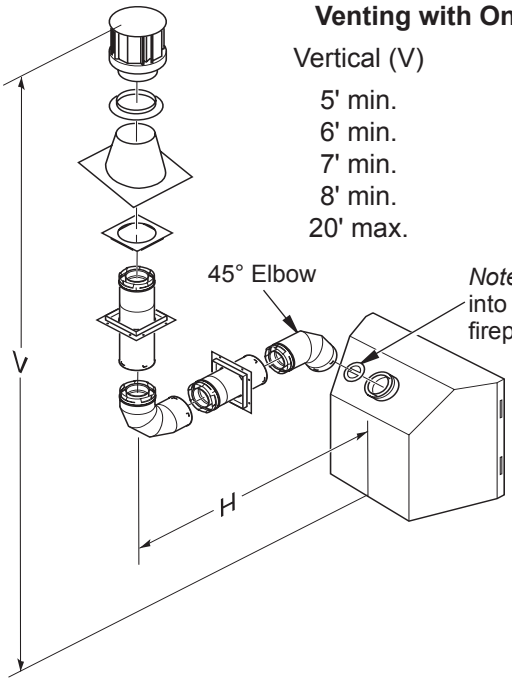

Venting with One 90° Elbow

Vertical (V)	Horizontal (H)
5' min.	2' max.
6' min.	4' max.
7' min.	6' max.
8' min.	8' max.
20' max.	8' max.

Figure 22 - Vertical Venting Configuration Using One 90° Elbow (Vertical Round High Wind Termination Shown)

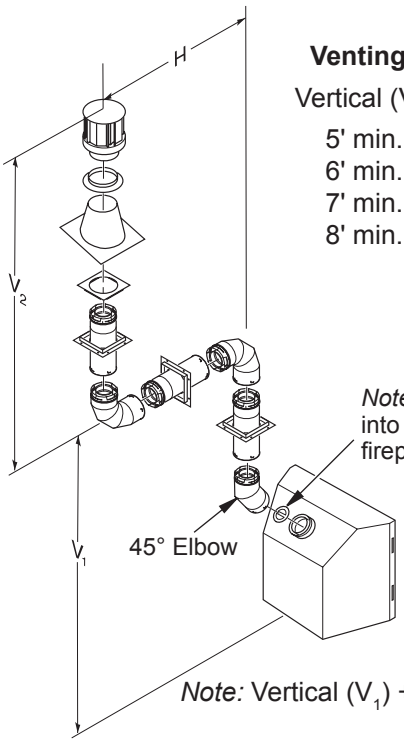

Venting with Two 90° Elbows

Vertical (V_1)	Horizontal (H)
5' min.	6' max.
6' min.	12' max.
7' min.	18' max.
8' min.	20' max.

Note: Vertical (V_1) + Vertical (V_2) = 40' max.

Figure 23 - Vertical Venting Configuration Using Two 90° Elbows (Vertical Round High Wind Termination Shown)

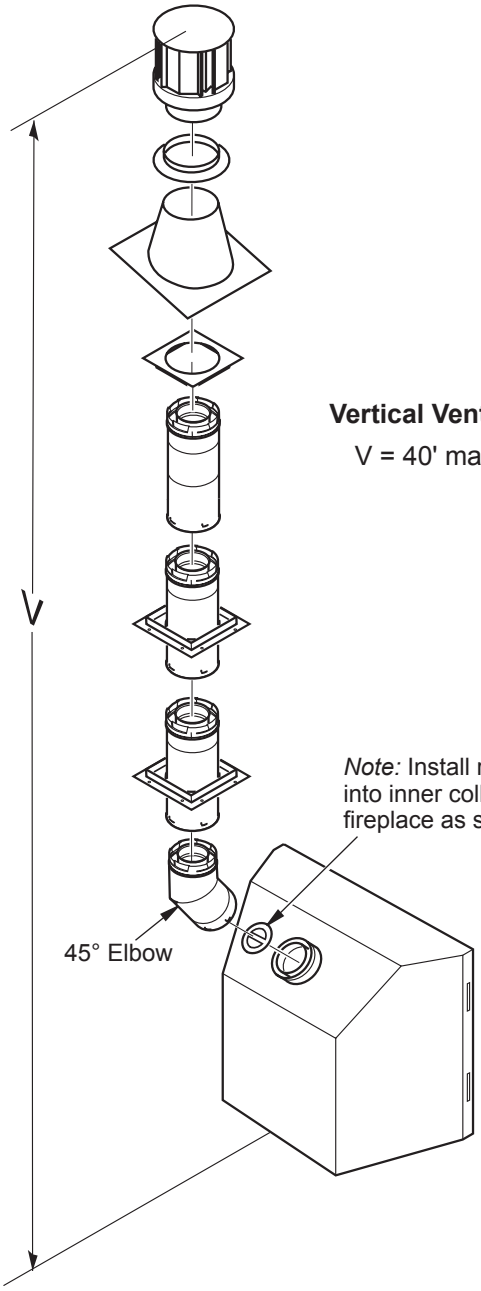

Vertical Venting

V = 40' max.

Figure 24 - Vertical Venting Configuration With No Horizontal Run (Vertical Round High Wind Termination Shown)

VENTING INSTALLATION INSTRUCTIONS
Continued

HIGH ALTITUDE INSTALLATION

Your DESA direct-vent fireplace has been tested and approved for elevations from 0-2000 feet (USA) and elevations from 0-4500 feet (Canada) .

When installing this fireplace at an elevation above 2000 feet (in the USA), you may need to decrease the input rating by changing the existing burner orifice to a smaller size. Reduce input 4% for each 1000 feet above sea level. Check with your local gas company for proper orifice size identification.

When installing this fireplace at an elevation above 4500 feet (in Canada), check with local authorities.

Consult your local gas company to help determine the proper orifice for your location.

For assistance with any high altitude installation contact DESA's Customer Service Department at 1-866-672-6040.

PARTS LIST FOR VENTING KITS AND COMPONENTS

DESA (5"/8") Pipe & Vent Kits

Number	Description
P58-6	6" Section Double Wall Pipe, Galvanized
P58-12	12" Section Double Wall Pipe, Galvanized
P58-24	24" Section Double Wall Pipe, Galvanized
P58-36	36" Section Double Wall Pipe, Galvanized
P58-48	48" Section Double Wall Pipe, Galvanized
PA58-712	Adjustable 7"-12" Section Double Wall Pipe, Galvanized
E58-45	45° Elbow, Galvanized
E58-90	90° Elbow, Galvanized
VKG-58	Ground Floor Vent Kit, Galvanized (Includes: 45° Elbow, 7"-12" Adjustable Pipe, Wall Firestop, Horizontal Square Termination, 16 Screws)
VKB-58	Basement Vent Kit, Galvanized (Includes: 45° Elbow, 7"-12" Adjustable Pipe, Wall Firestop, Horizontal Square Termination, 4' Pipe, 90° Elbow, 20 Screws)
VKS-58	Snorkel Vent Kit, Galvanized (Includes: 45° Elbow, 7"-12" Adjustable Pipe, Wall Firestop, 36" Snorkel Termination, 4' Pipe, 1' Pipe, 90° Elbow, 26 Screws)
VKR-58	Roof Vent Kit, Galvanized (Includes: 45° Elbow, 7"-12" Adjustable Pipe, Flue Restrictor, Vertical High Wind Termination, 2' Pipe, 4' Pipe, Wall Firestop, Storm Collar, Roof Flashing [0/12 - 6/12], 26 Screws)
VKC-58	Corner Vent Kit, Galvanized (Includes 45° Elbow, 7"-12" Adjustable Pipe, Wall Firestop, Horizontal Termination, 6" Pipe, 90° Elbow, 18 Screws)
HTK-58	Horizontal Round Termination Kit (Includes Round Termination, Wall Firestop, 45° Elbow)
HT-58	Horizontal Round Termination, Galvanized
HTS-58	Horizontal Square Termination, Galvanized
HTKS-58	Horizontal Square Termination Kit (Includes: Square Termination, Wall Firestop, 45° Elbow)
HTS-58	Horizontal Square Termination, Galvanized
VT-58	Vertical Round Termination, Galvanized
ST-58-14	14" Snorkel Termination, Galvanized
ST-58-36	36" Snorkel Termination, Galvanized
SC-58	Storm Collar, Galvanized
WF-58	Wall Firestop, Galvanized
RF-58-6	Roof Flashing - 0 to 6/12 Pitch, Galvanized
RF-58-12	Roof Flashing - 6/12 to 12/12 Pitch, Galvanized
VR-58	Vertical Restrictor, Galvanized
S-58	Vinyl Siding Standoff, Galvanized
WS-58	Wall Strap
CS-58	Cathedral Ceiling Support
FP-58	Firestop Plate
SF-58	Stucco Flashing - For use with HTS-58

FIREPLACE INSTALLATION

CHECK GAS TYPE

Use proper gas type for the fireplace unit you are installing. If your gas supply is not correct, do not install fireplace. See retailer where you purchased the fireplace for proper fireplace according to your gas type or to purchase gas conversion kit (see *Accessories*, page 34).

INSTALLING OPTIONAL BLOWER ACCESSORY

NOTICE: If installing blower in an existing fireplace with gas connections, shut off gas supply and disconnect heater from gas supply. Contact a qualified service person to do this.

⚠ WARNING: If there is a duplex electrical outlet installed in the right side of the bottom of the fireplace base area, be sure that the electrical power to the outlet is turned off before proceeding with blower installation. Failure to do this may result in serious injury.

Model BK Installation

Follow all instructions provided in the blower accessory kit.

1. Attach the power cord to the blower motor by firmly pushing the two female terminals at the end of the power cord onto the two spade terminals on the blower motor (see Figure 25).
2. Attach green ground wire from power cord to blower housing using screw provided (see Figure 25). Tighten screws securely.
3. Place the blower against the lower rear wall of the firebox outer wrapper with the exhaust port directed upward. The blower will fit inside the back opening and be held in position against the back wall by the magnets (see Figure 25).
4. Be certain that all wire terminals are securely attached to terminals on blower motor and that the screw retaining the green ground wire is tight.

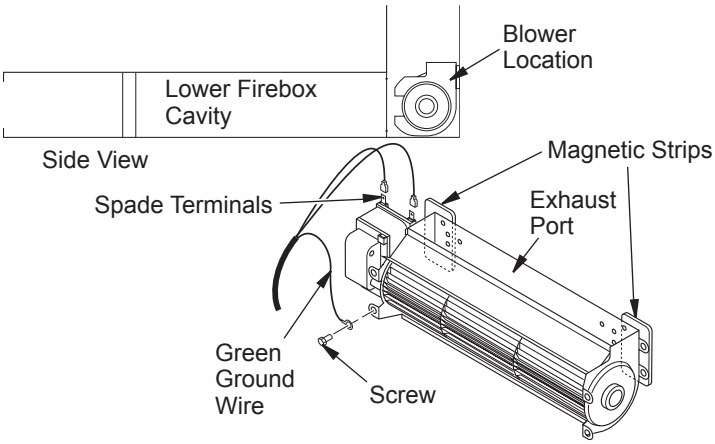

Figure 25 - Blower Model BK

5. Mount speed control box to switch bracket by placing the plastic control shaft forward through the opening in the switch bracket (see Figure 26).
6. While supporting speed control, secure control shaft with lock nut by pushing and turning lock nut with pliers clockwise until it is tight against front panel. Place control knob provided on shaft.
7. Turn on power to duplex outlet if previously turned off per the warning in column 1.
8. Plug in blower power cord.
   a. **If your firebox is installed as a freestanding unit with an accessory mantel,** determine whether the power cord will exit the left side or the right side of the firebox. Route power cord through exit hole and plug the power cord into a wall receptacle near the firebox.
   b. **If your firebox installation is recessed and/or pre-wired,** plug the power cord into the duplex outlet provided. Refer to your firebox owner's manual for instructions on wiring the duplex outlet.

⚠ CAUTION: Never touch the blower wheel while in operation.

9. Check to make sure that the power cord is completely clear of the blower wheel and that there are no other foreign objects in blower wheel. Turn blower on and check for operation. Turn blower off by turning knob fully counterclockwise before continuing.
10. Peel off the backing paper and stick the supplied wiring diagram decal on the firebox bottom approximately 12" in front of the blower (see Figure 27).

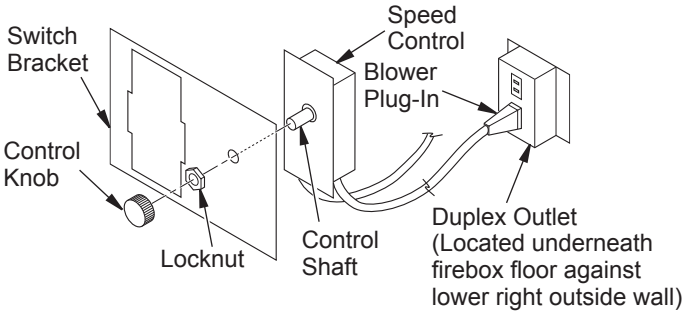

Figure 26 - Attaching Speed Control to Firebox

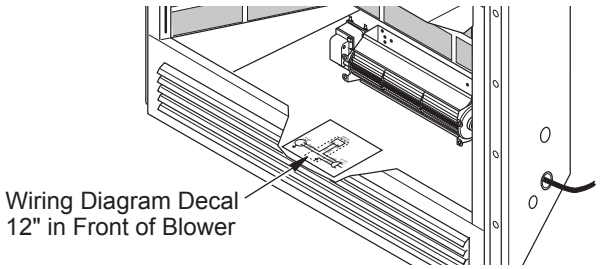

Figure 27 - Location of Wiring Diagram Decal (Model May Vary From Illustration)

FIREPLACE INSTALLATION
Continued

Model BKT Installation

Note: When installing the BKT thermostatically-controlled blower, you must first secure the thermal switch bracket to the blower if it has not already been factory installed.

1. Place the green ground wire with ring terminal between the bottom hole on the thermal switch bracket and the top ear hole on the blower assembly. Insert the phillips screw into all three pieces and tighten securely (see Figure 28).
2. Connect wire harness and power cord terminals. Connect the blue jumper wire to the blower motor terminal and the right side terminal of the thermal switch. Connect the black wire to the left side of the thermal switch and the white wire to the other remaining blower motor terminal.

Note: The power cord outer insulation sleeve may have to be stripped slightly to allow enough wire length to reach and make all connections. DO NOT trim excessive length away. Just enable enough to make all connections securely.

3. Place the blower against the lower rear wall of the firebox outer wrapper with the exhaust port directed upward and the thermodisc positioned up near the fireplace bottom. The thermodisc must be oriented near the fireplace bottom as shown in Figure 28, in order to sense temperature and properly operate. The blower will be held in position against the back wall by the magnets incorporated onto the blower housing (see Figure 28).
4. Be certain that all wire terminals are securely attached to terminals on blower motor and thermal switch and that the screw for the thermodisc bracket and green ground wire is tight.

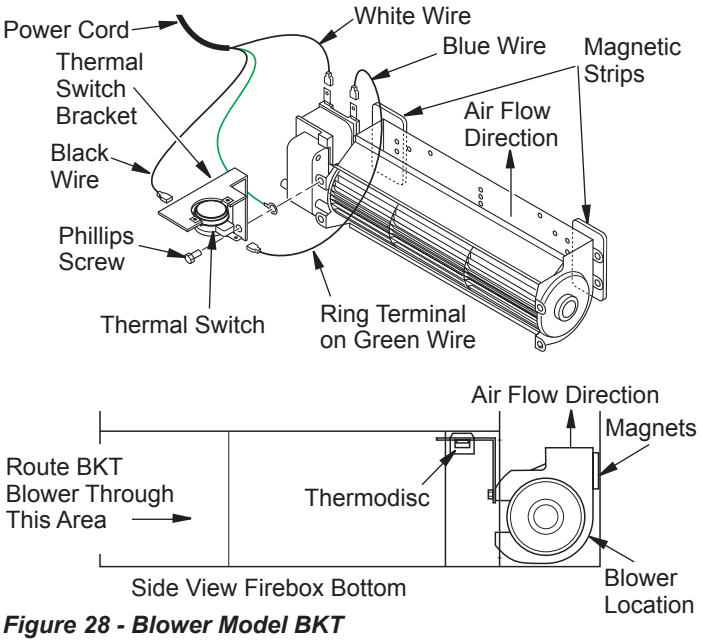

Figure 28 - Blower Model BKT

5. Mount the speed control box against the mounting plate provided in the lower fireplace cavity by placing the plastic control shaft forward through the round hole (see Figure 26, page 16).
6. While supporting speed control, secure control shaft with lock nut by pushing and turning lock nut with pliers clockwise until it is tight against mounting plate. Place control knob provided on shaft (see Figure 26, page 16).
7. Check to make sure that the power cord is completely clear of the blower wheel and that there are no other foreign objects in blower wheel. Also double check all wire leads and make sure wire routing is not pinched or in a precarious position. Correct accordingly.
8. Turn on power to duplex outlet if previously turned off per the warning in column 1, page 16.
9. Plug in blower power cord to duplex outlet.
10. The blower will only run when the speed control knob is in the ON position and the thermal switch senses temperature after the fireplace begins to heat up. The blower speed can be adjusted by rotating the control knob. To turn off, turn knob fully counterclockwise until it clicks off. If the blower is ON and has been running with the fireplace operating, the blower will continue to run for a short time after the fireplace has been turned off. As the thermal switch cools down, the blower shuts down automatically.
11. Peel off the backing paper and stick the supplied wiring diagram decal on the firebox bottom approximately 12" in front of the blower (see Figure 27, page 16).

Blower Wiring Diagram

⚠ CAUTION: Label all wires prior to disconnection when servicing controls. Wiring errors can cause improper and dangerous operation. Verify proper operation after servicing.

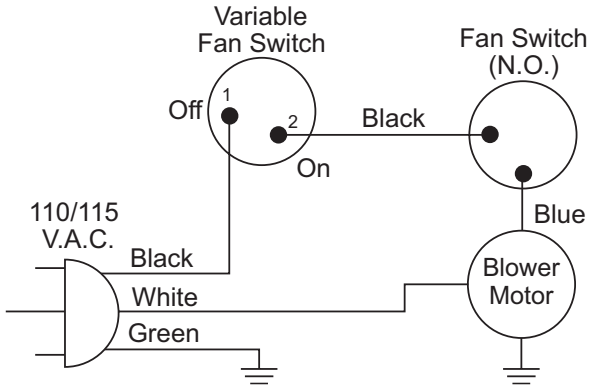

Figure 29 - Blower Wiring Diagram for Thermostat-Controlled Models

FIREPLACE INSTALLATION
Continued

INSTALLING GAS PIPING TO FIREPLACE LOCATION

⚠ WARNING: A qualified service person must connect fireplace to gas supply. Follow all local codes.

⚠ CAUTION: For propane/LP units, never connect fireplace directly to the propane/LP supply. This heater requires an external regulator (not supplied). Install the external regulator between the fireplace and propane/LP supply.

Installation Items Needed

Before installing fireplace, make sure you have the items listed below.

- external regulator (supplied by installer)
- piping (check local codes)
- sealant (resistant to propane/LP gas)
- equipment shutoff valve *
- test gauge connection *
- sediment trap
- tee joint
- pipe wrench
- approved flexible gas line with gas connector (if allowed by local codes)

* A CSA design-certified equipment shutoff valve with 1/8" NPT tap is an acceptable alternative to test gauge connection. Purchase the CSA design-certified equipment shutoff valve from your retailer.

For propane/LP connection only, the installer must supply an external regulator. The external regulator will reduce incoming gas pressure. You must reduce incoming gas pressure to between 11 and 14 inches of water. If you do not reduce incoming gas pressure, fireplace regulator damage could occur. Install external regulator with the vent pointing down as shown in Figure 30. Pointing the vent down protects it from freezing rain or sleet.

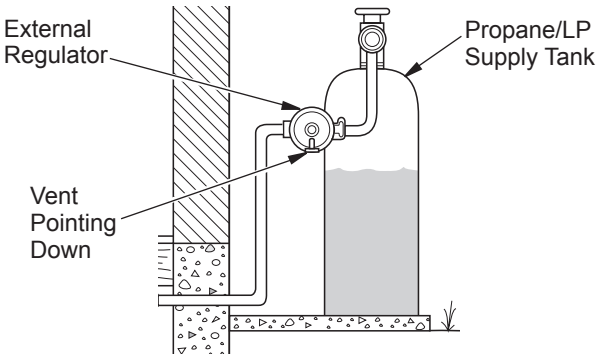

Figure 30 - External Regulator with Vent Pointing Down (Propane/LP Only)

⚠ CAUTION: Use only new, black iron or steel pipe. Internally-tinned copper tubing may be used in certain areas. Check your local codes. Use pipe of 1/2" inside diameter or greater to allow proper gas volume to fireplace. If pipe is too small, undue loss of volume will occur.

Installation must include an equipment shutoff valve, union and plugged 1/8" NPT tap. Locate NPT tap within reach for test gauge hook up. NPT tap must be upstream from fireplace (see Figure 31).

IMPORTANT: Install main gas valve (equipment shutoff valve) in an accessible location. The main gas valve is for turning on or shutting off the gas to the appliance.

Check your building codes for any special requirements for locating equipment shutoff valve to fireplaces.

Apply pipe joint sealant lightly to male NPT threads. This will prevent excess sealant from going into pipe. Excess sealant in pipe could result in clogged fireplace valves.

⚠ WARNING: Use pipe joint sealant that is resistant to liquid petroleum (LP) gas.

We recommend that you install a sediment trap/drip leg in supply line as shown in Figure 31. Locate sediment trap/drip leg where it is within reach for cleaning. Install in piping system between fuel supply and fireplace. Locate sediment trap/drip leg where trapped matter is not likely to freeze. A sediment trap traps moisture and contaminants. This keeps them from going into fireplace gas controls. If sediment trap/drip leg is not installed or is installed wrong, fireplace may not run properly.

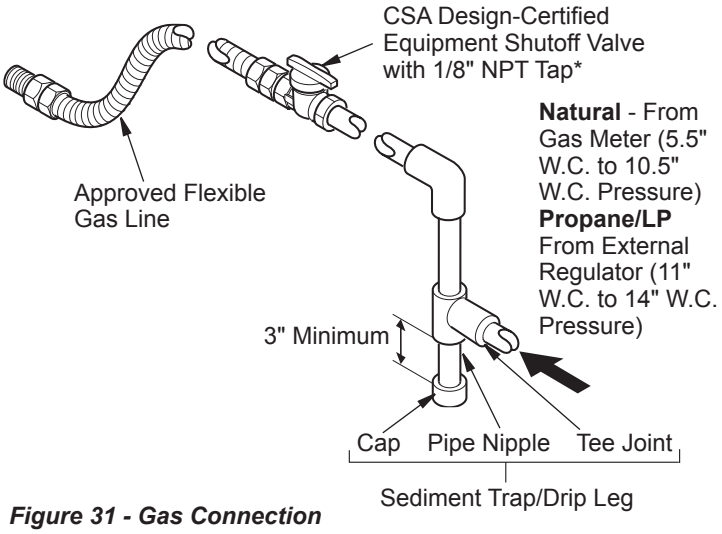

Figure 31 - Gas Connection

* The CSA design-certified equipment shutoff valve may be supplied with the appliance or you can purchase it from your retailer.

FIREPLACE INSTALLATION
Continued

CONNECTING FIREPLACE TO GAS SUPPLY

Installation Items Needed

- 5/16" hex socket wrench or nut-driver
- sealant (resistant to propane/LP gas, not provided)

1. Open lower louver door panel by gently pulling forward.
2. Route flexible gas line (provided by installer) from equipment shutoff valve to fireplace. Route flexible gas supply line through one of the access holes on side of fireplace.
3. Attach flexible gas line from gas supply to control valve (see Figure 32).
4. Check all gas connections for leaks. See *Checking Gas Connections*.

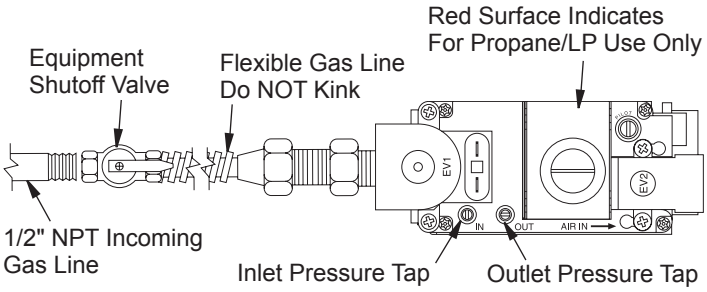

Note: Wire Connections Not Shown for Clarity

Figure 32 - Connecting Flexible Gas Line to Electronic Valve

CHECKING GAS CONNECTIONS

⚠ WARNING: Test all gas piping and connections, internal and external to unit, for leaks after installing or servicing. Correct all leaks at once.

⚠ WARNING: Never use an open flame to check for a leak. Apply noncorrosive leak detection fluid to all joints. Bubbles forming show a leak. Correct all leaks at once.

Pressure Testing Gas Supply Piping System

Test Pressures In Excess Of 1/2 PSIG (3.5 kPa)

1. Disconnect fireplace and its individual equipment shutoff valve from gas supply piping system. Pressures in excess of 1/2 psig (3.5 kPa) will damage fireplace gas regulator.
2. Cap off open end of gas pipe where equipment shutoff valve was connected.
3. Pressurize supply piping system by either opening propane/LP supply tank valve for propane/LP gas fireplace or opening main gas valve located on or near gas meter for natural gas fireplace or using compressed air.
4. Check all joints of gas supply piping system. Apply noncorrosive leak detection fluid to all joints. Bubbles forming show a leak. Correct all leaks at once.
5. Reconnect fireplace and equipment shutoff valve to gas supply. Check reconnected fittings for leaks.

Test Pressures Equal To or Less Than 1/2 PSIG (3.5 kPa)

1. Close equipment shutoff valve (see Figure 33).
2. Pressurize supply piping system by either opening propane/LP supply tank valve for propane/LP gas fireplace or opening main gas valve located on or near gas meter for natural gas fireplace or using compressed air.
3. Check all joints from propane/LP supply tank or gas meter to equipment shutoff valve (see Figure 34 for propane/LP or Figure 35 for natural gas). Apply noncorrosive leak detection fluid to all joints. Bubbles forming show a leak. Correct all leaks at once.

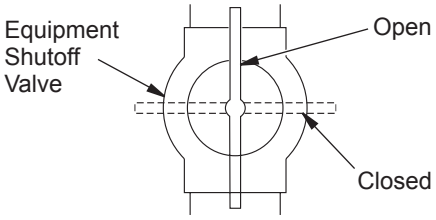

Figure 33 - Equipment Shutoff Valve

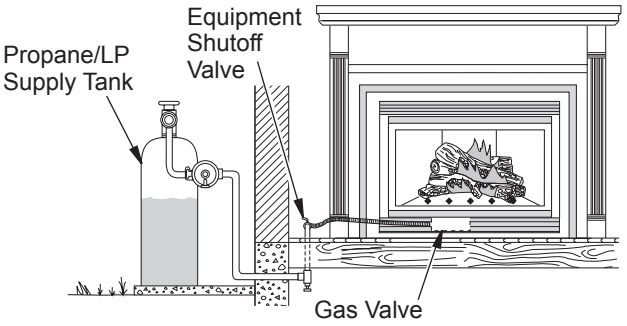

Figure 34 - Checking Gas Joints for Propane/LP Gas Fireplace

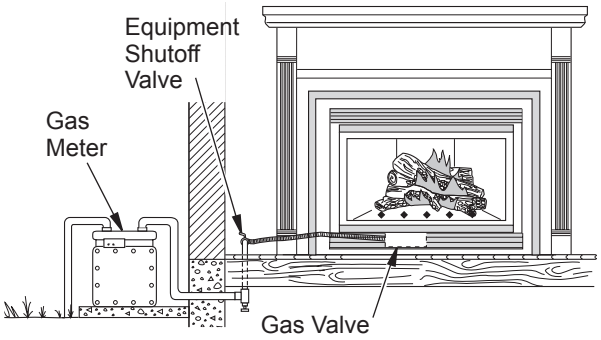

Figure 35 - Checking Gas Joints for Natural Gas Fireplace

FIREPLACE INSTALLATION
Continued

Pressure Testing Fireplace Gas Connections

1. Open equipment shutoff valve (see Figure 33, page 19).
2. Open propane/LP supply tank valve for propane/LP fireplace or main gas valve located on or near gas meter for natural gas fireplace.
3. Make sure control knob of fireplace is in the OFF position.
4. Check all joints from equipment shutoff valve to gas valve (see Figure 34 for propane/LP or Figure 35 for natural gas, page 19). Apply noncorrosive leak detection fluid to all joints. Bubbles forming show a leak. Correct all leaks at once.
5. Light fireplace (see *Operating Fireplace*, page 23). Check all other internal joints for leaks.
6. Turn off fireplace (see *To Turn Off Gas to Appliance*, page 24).

REMOVING/REPLACING GLASS DOOR

⚠ CAUTION: Do not operate this fireplace with a broken glass door panel or without the glass door panel securely in place. For replacement part information see *Replacement Parts*, page 29.

⚠ CAUTION: Wear gloves and safety glasses while handling or removing broken glass. Do not remove if glass is hot. Keep children and pets away from glass.

⚠ WARNING: If fireplace has been running, turn off and unplug fireplace. Let cool before removing glass door or louvers.

Removing Louver Panels

Remove the top and bottom louver panels by simultaneously pulling both top end spring latches towards the center of the appliance until they are disengaged from the locating holes (see Figure 36). Repeat for bottom spring latches and pull the louvers outward. To install or replace items removed, simply reverse the procedures above.

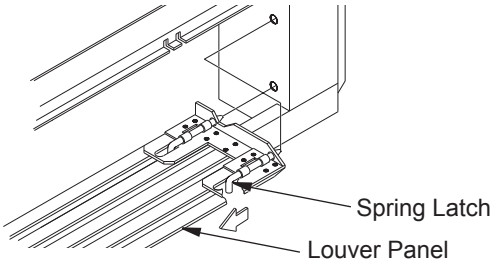

Figure 36 - Removing Louver Panel

Removing Glass Door

If replacement of glass is necessary, the entire assembly, glass and frame, must be replaced. If glass is broken, wear gloves and tape the remaining fragments onto the frame.

1. Remove screen assembly by pushing the rod either left or right and then down and forward to remove screen/rod assembly from the firebox. Set assembly aside.
2. Lift up on latches to unlock. There are two on top of firebox and two below firebox that hold glass door in place (see Figure 37).
3. While holding glass door to prevent it from falling and causing injury, remove the five screws from the hinge located on the left side of door frame assembly (see Figure 37).
4. Remount the new frame at the hinge with five new screws before closing door. This will ensure seating of the gasket.
5. Close glass door frame. Lock latches by placing the bar under the tab on door and pushing down and back on latch (see Figure 37).
6. Replace screen/rod assembly by reversing step 1.
7. Replace louvers by reversing procedure under *Removing Louver Panels*.

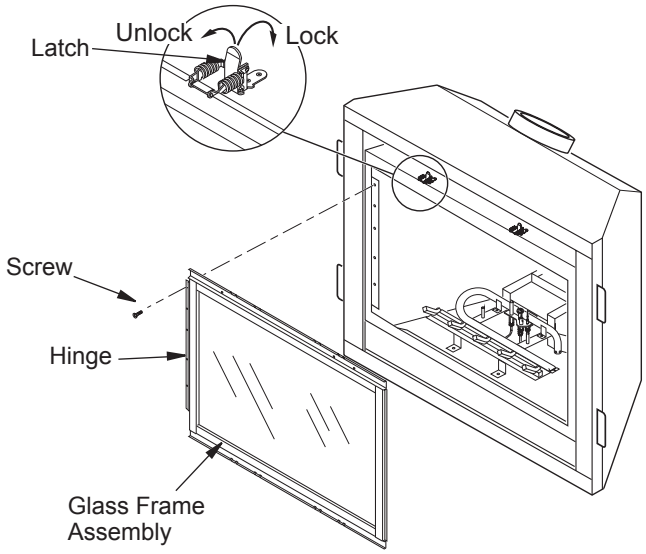

Figure 37 - Removing/Replacing Glass Door

Cleaning Glass Door

See *Cleaning and Maintenance* on page 25.

FIREPLACE INSTALLATION
Continued

INSTALLING OPTIONAL BRICK LINER MODEL BL32D

⚠ WARNING: If fireplace has been running, turn off and unplug fireplace. Let cool before installing brick liner.

This brick liner kit is optional. You may purchase brick liner from your local retailer or see page 37.

⚠ CAUTION: Always handle brick panels with two hands. Do not force brick panels into place. Excessive force will break brick panels.

1. Remove top and bottom louvers to allow access to door latches.
2. Unlock door latches and open glass door. See steps 1 and 2 of *Removing/Replacing Glass Door*, page 20.
3. If installing brick liner in new fireplace, go to step 4. If installing brick liner in an existing fireplace, carefully remove logs, lava rock and ember material.
4. Remove three screws from deflector shield on the inside top of firebox. Set shield and screws aside.
5. Install rear brick panel first. Rest bottom edge of panel on back edge of grate (see Figure 38).
6. Install left side brick panel by sliding it between the grate and the side of the firebox (see Figure 39).
7. Install the right brick panel using the same method described
8. Replace deflector shield using screws removed in step 4.
9. Follow instructions beginning in column 2 to install logs, lava rock and ember material.
10. Close glass door, lock latches on top and bottom of door and replace screen (see steps 5 and 6 of *Removing Glass Door*, page 20).
11. Close top and bottom louvers.

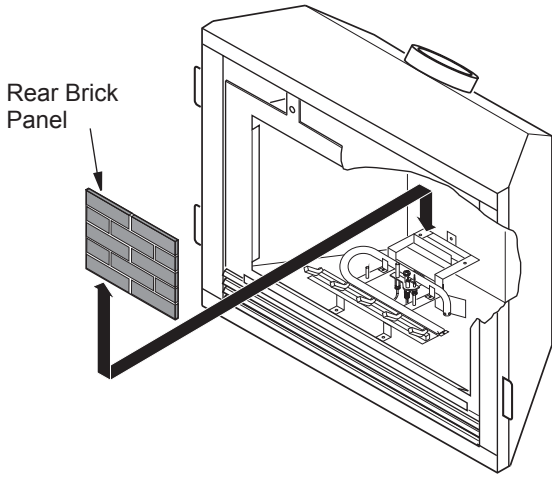

Figure 38 - Installing Rear Brick Panel

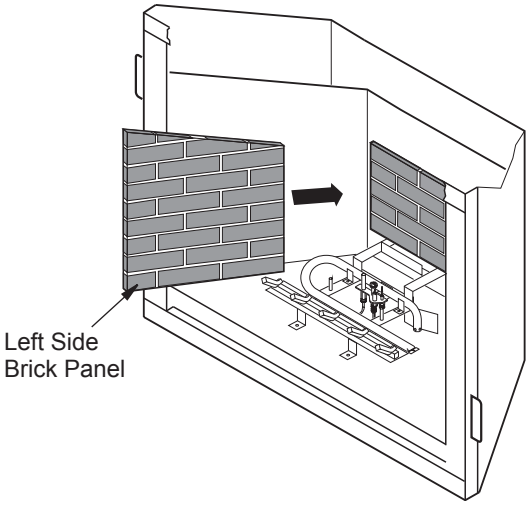

Figure 39 - Installing Side Brick Panels

INSTALLING LOGS, LAVA ROCK AND GLOWING EMBERS

Each log is marked with a number. These numbers will help you identify the log when installing. It is very important to install these logs exactly as instructed. Do not modify logs. Only use logs supplied with fireplace.

Open louvers, remove screen, unlock door latches and open glass door. See steps 1 and 2 of *Removing Glass Door*, page 20. Install logs according to instructions for fireplace model numbers.

1. Place log #1 (rear log) on top of grate. Make sure the notches in the bottom of the log fit over the grate (see Figure 40).

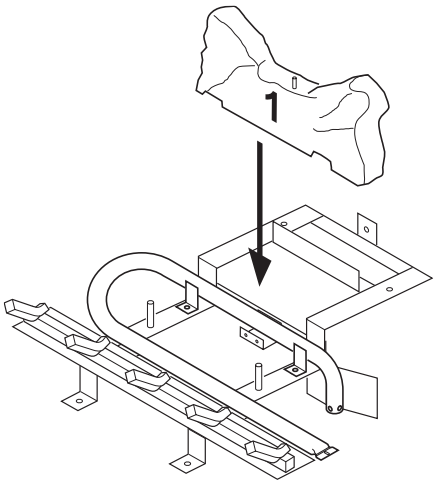

Figure 40 - Installing Log No. 1

FIREPLACE INSTALLATION
Continued

2. Rest log #2 (large front log) on the pins on the front part of the grate (see Figure 41).
3. Place log #3 (crossover log) onto the rear and front logs. Make sure it is seated properly on the smooth surface on the front log and on the pin on the back log as shown in Figure 42.
4. Place log #4 (right log) on the pin on the right side of front log as shown in Figure 43.
5. Place log #5 (base log) onto the front left part of the grate making sure the notches fit over the prongs of the grate). See Figure 44.
6. Place log #6 (left log) onto two pins on the left side of back and front log. See Figure 44.
7. Place lava rock along sides and front of firebox bottom in areas that are visible only. It is not necessary to use all of the lava rock provided.

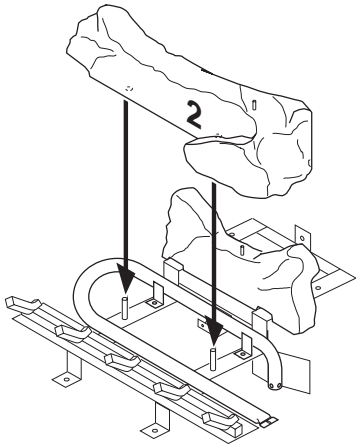

Figure 41 - Installing Log No. 2

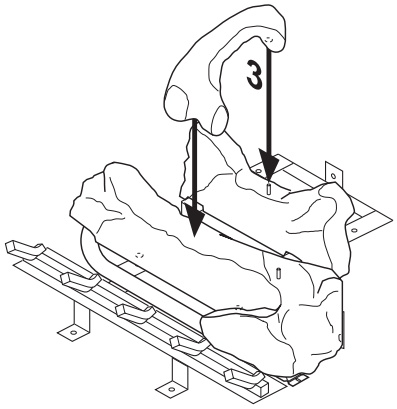

Figure 42 - Installing Log No. 3

8. Pull ember material apart into pieces no larger than a dime. Place these pieces loosely and sparingly directly onto the exposed section of the front burner and along the space between the burner and grate prongs (see Figure 45). This will create the glowing ember appearance as the flame touches the ember material. Do not block air slots by using too much ember material in one area. It is not necessary to use all of the ember material provided.
9. Close glass door, lock door latches, replace screen and close louvers (see steps 5 and 7 of *Removing/Replacing Glass Door*, page 20).

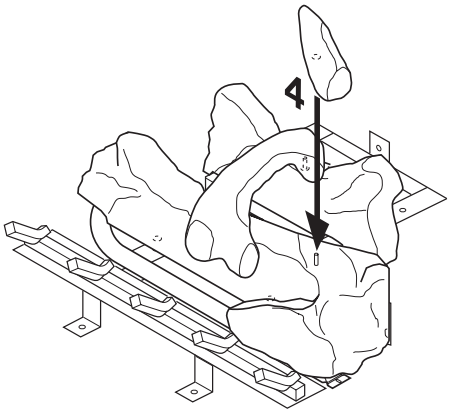

Figure 43 - Installing Log No. 4

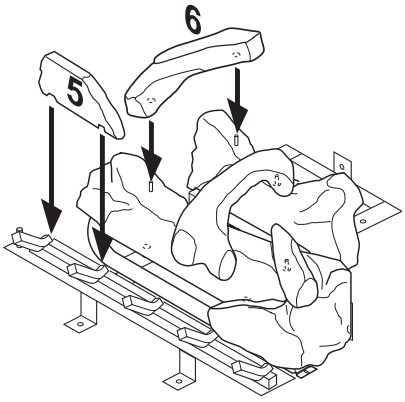

Figure 44 - Installing Logs No. 5 and No. 6

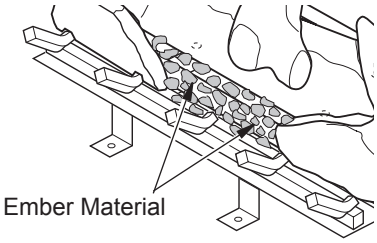

Figure 45 - Placing Ember Material on Burner

FIREPLACE INSTALLATION
Continued

WALL SWITCH INSTALLATION

The installation of a wall switch allows you to activate the gas control valve and turn the fireplace on and off. The wall switch is to be connected to the incoming 120 volt regular household wiring that supplies the electricity to the fireplace.

OPTIONAL REMOTE CONTROL INSTALLATION (Model WRC)

Note: If using optional wireless hand-held remote control, the wall switch must be in the ON position to be operational. The remote control then becomes the switching mechanism for fireplace operation.

1. Open lower louver panel.
2. The WRC model receiver does not require a battery. The receiver can be installed by first plugging the short extension cord into the fireplace receptacle. Then plug the receiver unit into the extension cord. Finally plug the ignition module plug into the receiver unit (see Figure 46).
3. Activate the remote handset battery by removing the insulating tab on the back of the handset (see Figure 47). The battery is included pre-installed.
4. Once the battery is activated the unit is ready to use.
5. Close lower louver panel.

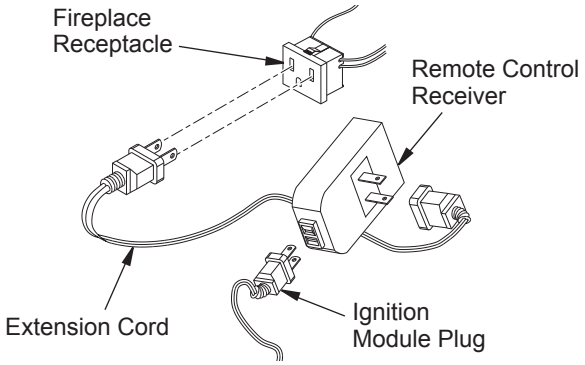

Figure 46 - Installing the WRC Remote Receiver

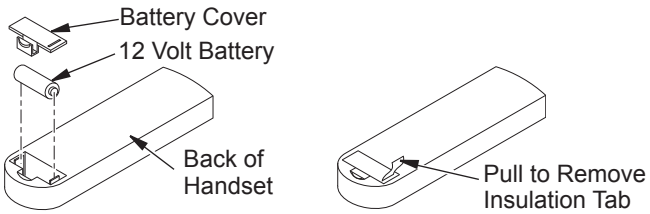

Figure 47 - Installing Battery into Back of Handset

WIRING DIAGRAM

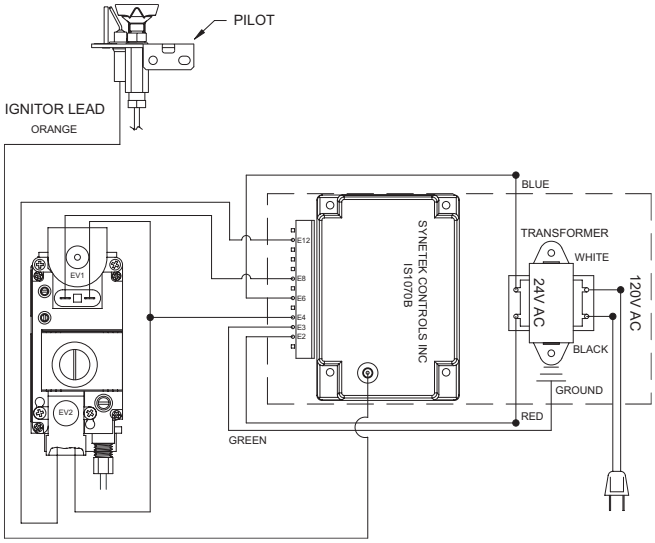

OPERATING FIREPLACE

FOR YOUR SAFETY READ BEFORE LIGHTING

⚠ WARNING: If you do not follow these instructions exactly, a fire or explosion may result causing property damage, personal injury or loss of life.

A. This appliance is equipped with an ignition device which automatically lights the pilot. Do not try to light the pilot by hand.

B. BEFORE LIGHTING smell all around the appliance area for gas. Be sure to smell next to the floor because some gas is heavier than air and will settle on the floor.

WHAT TO DO IF YOU SMELL GAS
- **Do not try to light any appliance.**
- **Do not touch any electric switch.**
- **Do not use any phone in your building.**
- **Immediately call your gas supplier from a neighbor's phone. Follow the gas supplier's instructions.**
- **If you cannot reach your gas supplier, call the fire department.**

C. Do not use this appliance if any part has been under water. Immediately call a qualified service technician to inspect the appliance and to replace any part of the control system and any gas control which has been under water.

OPERATING FIREPLACE
Continued

LIGHTING INSTRUCTIONS

NOTICE: During initial operation of new heater, burning logs will give off a paper-burning smell. Orange flame will also be present. Open damper or window to vent smell. This will only last a few hours.

1. **STOP! Read the safety information, page 23.**
2. **Turn off all electric power to the appliance.**
3. **Turn wall switch to the OFF position.**
4. **Open lower louver panel.**
5. **Turn equipment shutoff valve clockwise to the OFF position (see Figure 48). Do not force.**
6. **Wait five (5) minutes to clear out any gas. Then smell for gas, including near the floor. If you smell gas, STOP! Follow "B" in the safety information in page 23. If you don't smell gas, go to the next step.**
7. **Turn equipment shutoff valve counterclockwise to the ON position. Do not force.**
8. **Close lower louver panel.**
9. **Turn on all electric power to the appliance.**
10. **Turn the wall switch to the ON position.**
11. **Visually locate the pilot. The ignitor should begin to spark and the main burner should ignite once flame appears at pilot.**
    - **If lighting the appliance for the first time each season, it may take several attempts before the supply gas can reach the pilot and main burners.**
    - **If the appliance will not stay lit after several attempts, follow the instructions *To Turn Off Gas To Appliance* and call your service technician or gas supplier.**

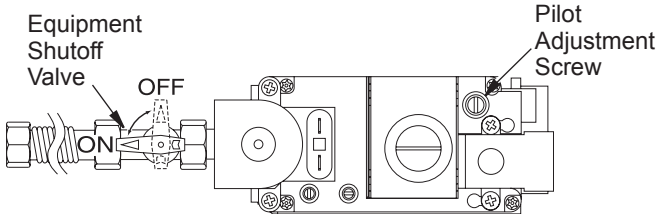

Figure 48 - Turning Equipment Shutoff Valve to the OFF Position

TO TURN OFF GAS TO APPLIANCE

1. **Turn off the wall switch.**
2. **Turn off all electric power to the appliance if service is to be performed.**
3. **Open lower louver panel.**
4. **Remove front hearth brick and control access panel.**
5. **Turn equipment shutoff valve clockwise to OFF. Do not force.**
6. **Close lower louver panel.**

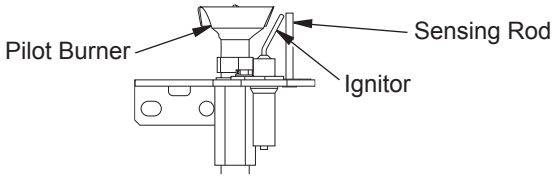

Figure 49 - Pilot

OPTIONAL REMOTE OPERATION

Note: **The WRC receiver and hand-held remote control kit must be purchased separately (see *Accessories*, page 34). Follow installation instructions on page 23.**

1. **Turn equipment shutoff valve to ON position. You can now turn the burner on and off with the hand-held remote control unit.**

   IMPORTANT: **Be sure to press the ON/OFF buttons on the hand-held remote control unit for up to 3 seconds to assure proper operation.**
2. **Press the ON/OFF button to turn the burner on and off.**

OPERATING OPTIONAL BLOWER ACCESSORY

Locate the blower controls by opening the lower louver panel on the fireplace. Blower controls are located on the left side of the switch bracket to the right just inside the louver panel.

The BK manual blower and the BKT thermostatically-controlled blower have an ON setting and an OFF setting. The blower will only run when the switch is in the ON position. In the OFF position, the blower will not operate.

Note for BKT Only: **If you are using BKT blower with optional thermostat (wall mounted or remote control) for the fireplace, your fireplace and blower will not turn on and off at the same time. The fireplace may run for several minutes before the blower turns on. After the heater modulates to the pilot position, the blower will continue to run. The blower will shut off after the firebox temperature decreases.**

The blower helps distribute heated air from the fireplace. Periodically check the louvers of the firebox and remove any dust, dirt or other obstructions that will hinder the flow of air.

INSPECTING BURNERS

Check pilot flame pattern and burner flame patterns often.

PILOT ASSEMBLY

The pilot assembly is factory preset for the proper flame. Alterations may have occurred during shipping and handling. The pilot is located on the left hand side of the burner.

The flame must envelope 1/4" of top of the ignitor/sensor and grounding stem.

If your pilot assembly does not meet these requirements:

- Turn the adjustment screw marked PILOT clockwise to decrease or counterclockwise to increase the flame to proper size (see Figure 48, page 24). Do not remove the adjustment screw.
- see *Troubleshooting*, page 27

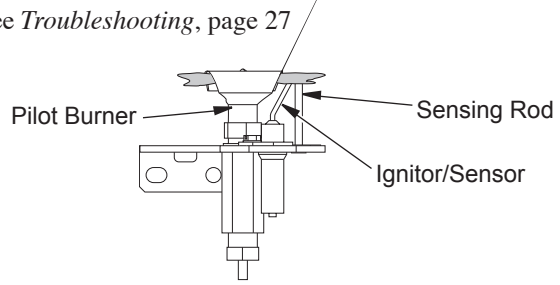

Figure 50 - Correct Pilot Flame Pattern

BURNER FLAME PATTERN

Burner flames will be steady; not lifting or floating. Flame patterns will be different from unit to unit and will vary depending on installation type and weather conditions.

If the vent configuration is installed incorrectly, the flames will lift or "ghost". This can be dangerous. Inspect the flames after installation to ensure proper installation and performance.

Figure 51 shows a typical flame pattern.

If burner flame pattern differs from that described:

- turn fireplace off (see *To Turn Off Gas to Appliance,* page 24)
- see *Troubleshooting*, page 27

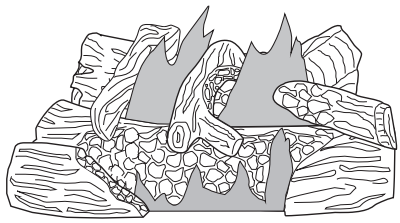

Figure 51 - Typical Flame Pattern

CLEANING AND MAINTENANCE

⚠ WARNING: Turn off fireplace and let cool before cleaning.

⚠ CAUTION: You must keep control areas, burners and circulating air passageways of fireplace clean. Inspect these areas of fireplace before each use. Have fireplace inspected yearly by a qualified service person. Fireplace may need more frequent cleaning due to excessive lint from carpeting, bedding material, pet hair, etc.

GLASS DOOR

⚠ WARNING: Handle glass door panel with care. Do not strike, slam or otherwise abuse glass. Do not operate fireplace with the glass door unlatched, removed, cracked or broken.

⚠ WARNING: Do not use abrasive cleaners as this may damage glass. Use a nonabrasive household glass cleaner to clean glass. Do not clean glass when hot.

Glass must be cleaned periodically. During start-up it is normal for condensation to form on the inside of the glass causing lint, dust and other airborne particles to cling to the glass surface. During initial start-up a slight film may form on the glass due to paint curing. The glass should be cleaned several times with a non-ammonia, nonabrasive household cleaner and warm water after the first two weeks of operation. Thereafter, clean the glass two or three times during each heating season, depending on the usage and circumstances present. Refer to *Removing/Replacing Glass Door* on page 20 of this manual when removing glass door for cleaning.

⚠ WARNING: Only parts supplied by the manufacturer should be used when replacing broken or damaged glass door panel (see *Replacement Parts*, page 29). This glass door panel is a complete unit. No substitute materials may be used.

⚠ CAUTION: Wear gloves and safety glasses while handling or removing broken glass. Do not remove if glass is hot. Keep children and pets away from glass.

If glass has been broken, carefully remove glass door (see *Removing/Replacing Glass Door*, page 20). Vacuum all glass pieces with a shop vac.

⚠ CAUTION: Do not vacuum if pieces are hot.

CLEANING AND MAINTENANCE
Continued

Use only the tempered glass door replacement intended for this fireplace (see *Replacement Parts*, page 29 for detail on ordering). No substitutions may be made. See *Removing/Replacing Glass Door*, page 20 for instructions for replacing glass door.

⚠ WARNING: Do not operate fireplace with the glass door unlatched, removed, cracked or broken.

PILOT AND BURNERS

- Remove ember material before cleaning burners and replace when cleaning is complete.
- Burner and controls should be cleaned with compressed air to remove dust, dirt or lint.
- Use a vacuum cleaner or small, soft bristled brush to remove excess dust, dirt or lint.

LOGS

- If you remove logs for cleaning, refer to *Installing Logs, Lava Rock and Glowing Embers*, page 21, to properly replace logs.
- Use a vacuum cleaner to remove any carbon buildup on logs.
- Replace log(s) if broken. See *Replacement Parts* on page 29.
- Replace ember material periodically as needed. See *Replacement Parts* on page 29.

VENTING SYSTEM

Conduct annual inspection of the venting system following these guidelines:

1. Check areas of venting system that are exposed to the weather for corrosion (rust spots or streaks and, in extreme cases, holes). Have these items replaced immediately by a qualified service person.
2. Remove the vent cap and shine a flashlight into the vent. Remove any foreign material.
3. Check for evidence of excessive condensation. Continuous condensation can cause corrosion of caps, pipes and fittings and can be caused by having excessive lateral runs, too many elbows or exterior portions of the system being exposed to cold weather.
4. Inspect joints to verify that no pipe section or fitting has been disturbed and loosened. Check mechanical supports such as wall straps for rigidity.

TROUBLESHOOTING

Note: Before troubleshooting the system, make sure the gas shutoff valve is ON.

The two most common causes of a malfunctioning gas appliance are:

1. Loose wiring connections
2. Construction debris clogging the pilot and/or gas control valve filter

⚠ WARNING: Turn off heater and let cool before servicing. Only a qualified service person should service and repair heater.

⚠ CAUTION: Never use a wire, needle or similar object to clean pilot. This can damage pilot unit.

OBSERVED PROBLEM	POSSIBLE CAUSE	REMEDY
Ignitor will not spark or pilot will not light	1. No gas supply or shutoff valve is OFF	1. Check to see if you have gas supply and that equipment shutoff valve is opened
	2. Air in gas line	2. Repeat lighting procedure several times to purge all air out of lines. If after repeated attempts appliance does not light, call for qualified service and repair.
	3. Construction debris clogging pilot orifice	3. Remove debris and dirt, inspect and clean any other possible obstructions
	4. Low gas pressure	4. Contact your gas supplier to check pressure
	5. Kinked pilot line	5. Have a qualified technician replace pilot line
	6. Control valve is not opening	6. Replace control valve (refer to *Replacement Parts*, page 29)
	7. No power to unit or the ignition module or power transformer is bad	7. Check that main power is on and that all wire connections are made correctly to the ignition model (see *Wiring Diagram*, page 23). Check for 24 VAC at the secondary side of the transformer. If 24 VAC is present and the module does not operate, have the module replaced otherwise have the transformer replaced
	8. Vent damper not fully open	8. Open vent damper until fully locked in OPEN position
Pilot will not stay lit	1. Loose wiring on ignitor wire to ignition module and/or poor ground to ignition module	1. Check wiring connection. Refer to wiring diagram (see *Wiring Diagram*, page 23) and/or check ground wire to ignition module
	2. Pilot flame too low to sense	2. Clean and adjust pilot burner and check gas supply and inlet pressure to unit *Note:* Have a qualified technician replace pilot assembly if broken or corroded
No gas to burner, although wall switch is set to the ON position	1. Wall switch wires defective or too long	1. Check electrical connections
Frequent pilot outage	1. Pilot flame may be too low, causing safety pilot to “drop out”	1. Clean and adjust pilot flame for maximum flame impingement on thermopile
	2. Improper venting or excessive blockage	2. Have the vent system inspected, including the termination cap. Remove any restriction or obstruction

TROUBLESHOOTING
Continued

⚠ WARNING: If you smell gas
- **Shut off gas supply.**
- **Do not try to light any appliance.**
- **Do not touch any electrical switch; do not use any phone in your building.**
- **Immediately call your gas supplier from a neighbor's phone. Follow the gas supplier's instructions.**
- **If you cannot reach your gas supplier, call the fire department.**

OBSERVED PROBLEM	POSSIBLE CAUSE	REMEDY
Fireplace produces a clicking/ticking noise just after burner is lit or shut off	1. Metal expanding while heating or contracting while cooling	1. This is common with most fireplaces. If noise is excessive, contact qualified service person
Slight smoke or odor during initial operation	1. Residues from manufacturing processes and logs curing	1. Problem will stop after a few hours of operation
Gas odor even when control knob is in OFF position	1. Gas leak. **See Warning statement at top of page** 2. Control valve defective	1. Locate and correct all leaks (see *Checking Gas Connections*, page 19) 2. Replace control valve
Gas odor during combustion	1. Foreign matter between control valve and burner 2. Gas leak. **See Warning statement at top of page**	1. Take apart gas tubing and remove foreign matter 2. Locate and correct all leaks (see *Checking Gas Connections*, page 19)
Glass soots	1. Flame impingement on logs 2. Debris around burner air mixer	1. Adjust the log set so that the flame does not excessively impinge on it 2. Inspect the opening at the base of the burner to see that it is NOT packed with any type of material
Dark residue on logs or inside of fireplace	1. Improper log placement 2. Air holes at burner inlet blocked 3. Burner flame holes blocked 4. Improper venting or excessive blockage 5. Excessive amounts of embers and pan material	1. Properly locate logs (see log placement section on page 21) 2. Clean out air holes at burner inlets. Periodically repeat as needed 3. Remove blockage 4. Have the vent system inspected, including the termination cap. Remove any restrictions or obstruction 5. Clear excess embers until a minimum gap of 1/2" remains under the grate

REPLACEMENT PARTS

Note: Use only original replacement parts. This will protect your warranty coverage for parts replaced under warranty.

PARTS UNDER WARRANTY

Contact authorized retailers of this product. If they can not supply original replacement part(s), call DESA's Customer Service Department at 1-866-672-6040.

When calling DESA, have ready

- your name
- your address
- model and serial numbers of your fireplace
- how fireplace was malfunctioning
- type of gas used (propane/LP or natural gas)
- purchase date

Usually, we will ask you to return the part to the factory.

PARTS NOT UNDER WARRANTY

Contact authorized retailers of this product. If they can not supply original replacement part(s), call DESA at 1-866-672-6040 for referral information.

When calling DESA, have ready

- model number of your fireplace
- the replacement part number

SERVICE HINTS

When Gas Pressure Is Too Low

- pilot will not stay lit
- burners will have delayed ignition
- fireplace will not produce specified heat
- propane/LP gas supply might be low (propane/LP units only)

You may feel your gas pressure is too low. If so, contact your local gas supplier.

TECHNICAL SERVICE

You may have further questions about installation, operation or troubleshooting. If so, contact DESA's Customer Service Department at 1-866-672-6040. When calling, please have your model and serial numbers of your heater ready.

You can also visit DESA's technical service web site at **www.desatech.com**.

SPECIFICATIONS

	(V)T32EN(R)-A	(V)T32EP(R)-A
Btu	12,000/18,000 Btu/hr	11,000/17,000 Btu/hr
Gas Type	Natural	Propane/LP
Ignition	Piezo	Piezo
Manifold Pressure	3.5" w.c.	10.0" w.c.
Minimum Inlet Supply Pressure	5.5" w.c.	11.0" w.c.
Dimension (H x W x D) Fireplace		
(Actual size of firebox. Measurements do not include nailing flanges or standoffs).	32 1/4" x 34 1/2" x 16 5/8" 819 x 876 x 422 mm	32 1/4" x 34 1/2" x 16 5/8" 819 x 876 x 422 mm
Carton	33 1/2" x 37 1/2" x 17 1/2" 851 x 953 x 445 mm	33 1/2" x 37 1/2" x 17 1/2" 851 x 953 x 445 mm
Weight, lbs/kg*		
Fireplace	80 lbs/36 kg	80 lbs/36 kg
Shipping	83 lbs/38 kg	83 lbs/38 kg

*For refractory lined models add 45 pounds.

ILLUSTRATED PARTS BREAKDOWN

MODELS (V)T32EN-A, (V)T32ENB-A
(V)T32ENR-A, (V)T32ENRB-A
(V)T32EP-A, (V)T32EPB-A
(V)T32EPR-A, (V)T32EPRB-A

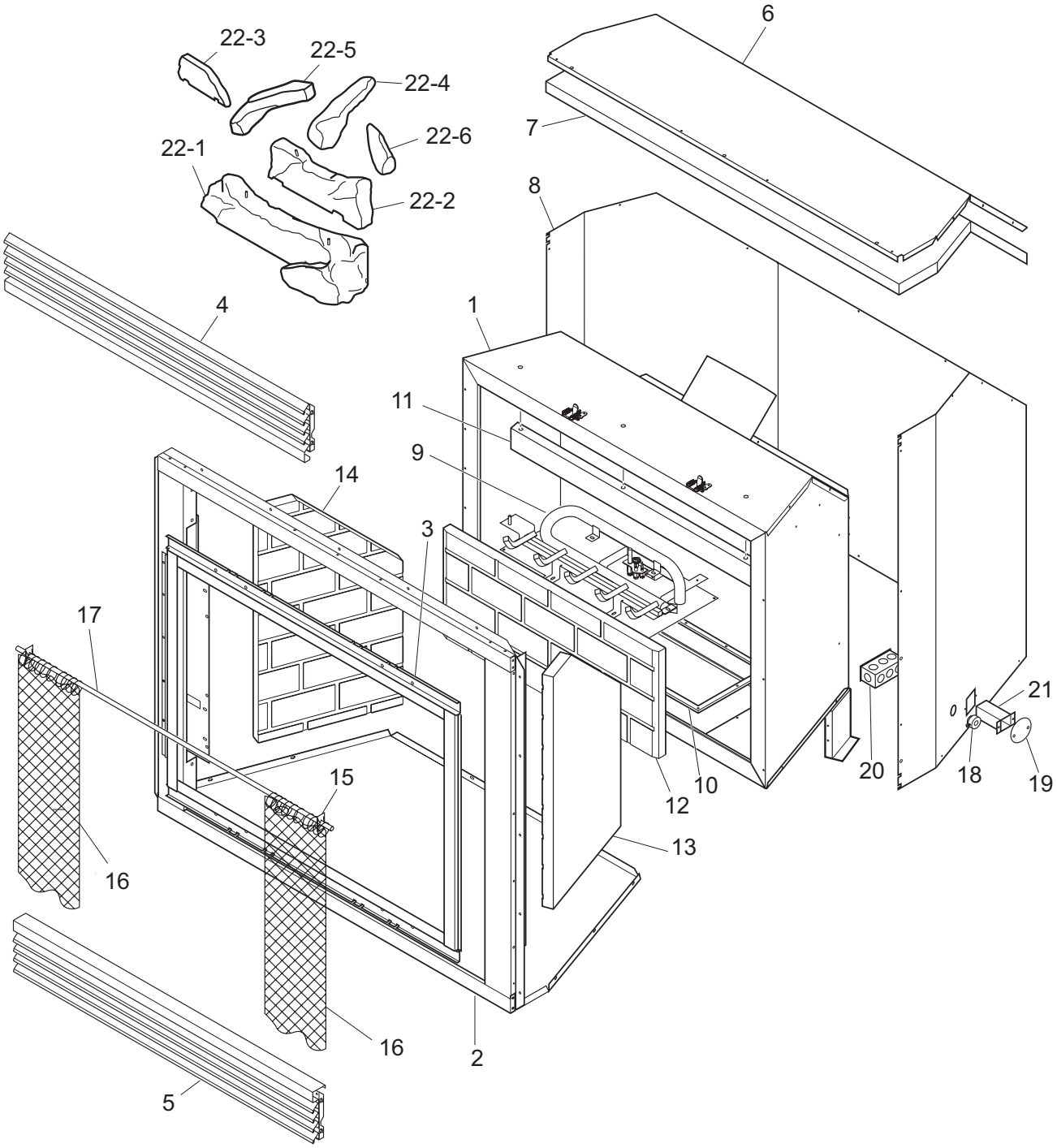

PARTS LIST

This list contains replaceable parts used in your fireplace. When ordering parts, follow the instructions listed under *Replacement Parts* on page 29 of this manual.

KEY NO.	PART NUMBER (V)T32EN-A (V)T32EP-A (V)T32ENB-A (V)T32EPB-A	PART NUMBER (V)T32ENR-A (V)T32EPR-A (V)T32ENRB-A (V)T32EPRB-A	DESCRIPTION	QTY.
1	**	**	Firebox Assembly	1
2	**	**	Face Weldment	1
3	108892-01	108892-01	Door Assembly (T Models Only)	1
	108892-02	108892-02	Door Assembly (VT Models Only)	1
4	108903-01	109155-01	Top Louver Assembly	1
5	108903-02	109155-02	Bottom Louver Assembly	1
6	**	**	Fireplace Top	1
7	**	**	Fireplace Top Insulation	1
8	**	**	Fireplace Surround	1
9	108885-03	108885-03	Burner Assembly (Natural Gas)	1
	108885-04	108885-04	Burner Assembly (Propane/LP Gas) (See pages 34 & 35)	1
10	108890-01	108890-01	Burner Base Gasket	1
11	109082-03	109082-03	Heat Shield	1
12	108897-01	108897-01	Rear Refractory Brick Panel (B Models Only)	1
13	108901-01	108901-01	Right Refractory Brick Panel (B Models Only)	1
14	108901-02	108901-02	Left Refractory Brick Panel (B Models Only)	1
15	11418	11418	Push-On Nut	2
16	108440-01	108440-01	Screen	2
17	109479-01	109479-01	Screen Rod	1
18	14123	14123	Strain Relief	1
19	21171	21171	Gas Knock-Out Cover	2
20	24353	24353	Handy Box Assembly	1
21	24460	24460	Gas Conduit Assembly	1
22	109222-01	109222-01	Log Set	1
22-1	109403-01	109403-01	Front Log (Log 1)	1
22-2	109404-01	109404-01	Rear Log (Log 2)	1
22-3	109407-01	109407-01	Base Log (Log 3)	1
22-4	109406-01	109406-01	Crossover Log (Log 4)	1
22-5	109405-01	109405-01	Left Top Log (Log 5)	1
22-6	109408-01	109408-01	Right Top Log (Log 6)	1
PARTS AVAILABLE - NOT SHOWN				
	25487	25487	Lava Rock/Bag Assy	1
	27253	27253	Notice Label	1
	55240	55240	Vent Label	1

** Not a field replaceable part.

ILLUSTRATED PARTS BREAKDOWN

BURNER ASSEMBLY MODELS

(V)T32EN-A, (V)T32ENB-A, (V)T32ENR-A, (V)T32ENRB-A, (V)T32EP-A, (V)T32EPB-A, (V)T32EPR-A, (V)T32EPRB-A

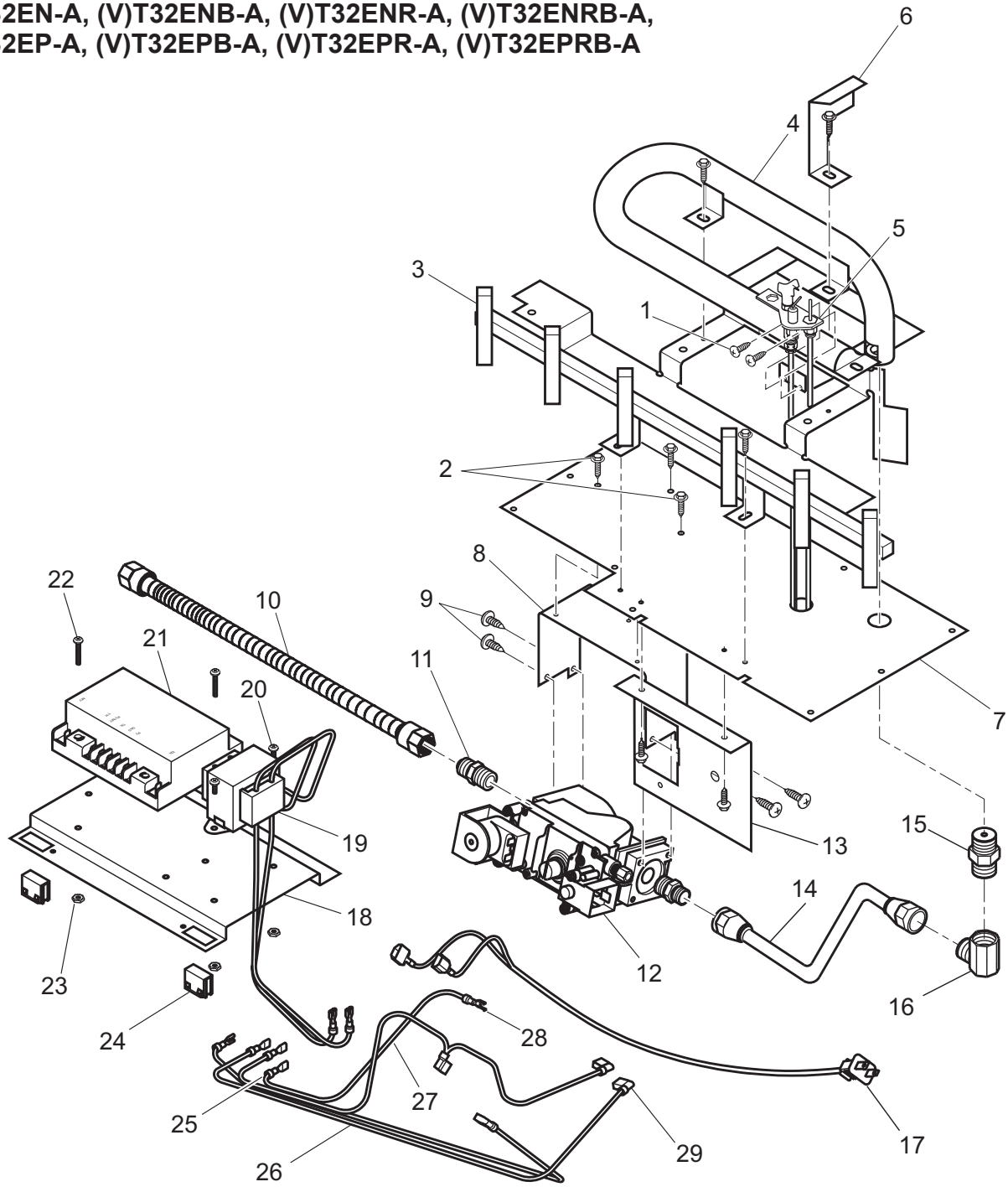

PARTS LIST

BURNER ASSEMBLY MODELS

(V)T32EN-A, (V)T32ENB-A, (V)T32ENR-A, (V)T32ENRB-A, (V)T32EP-A, (V)T32EPB-A, (V)T32EPR-A, (V)T32EPRB-A

This list contains replaceable parts used in your fireplace. When ordering parts, follow the instructions listed under *Replacement Parts* on page 29 of this manual.

KEY NO.	PART NUMBER	DESCRIPTION	QTY.
1	11102	Screw #8-32 x 3/8 PPH Zinc	2
2	11105	Screw #10 x 1/2 Zinc	9
3	108886-01	Base Grate Assembly	1
4	108891-01	Burner	1
5	108866-01	Pilot Assembly (Natural)	1
	108866-02	Pilot Assembly (Propane/LP)	1
6	27113	Air Deflector	1
7	108889-01	Burner Assembly Base	1
8	26808	Valve Bracket	1
9	11179	Screw #10-24 x 1/4 Zinc	4
10	14253	Flexible Connector	1
11	14500	Brass Fitting	2
12	14569	Electronic Valve (Natural)	1
	14570	Electronic Valve (Propane/LP)	1
13	26827	Switch Bracket	1
14	104509-02	Aluminum Tubing Assy	1
15	104506-25	Orifice #47 (Natural)	1
	14514	Orifice #55 (Propane/LP)	1
16	14528	Brass Elbow Fitting	1
17	108863-01	Supply Connect Plug	1
18	23416	Electronic Components Board	1
19	14129	Transformer	1
20	11147	Screw, #10-24 x 1/2 PPH Blk	2
21	110286-01	Ignition Module, Synetek	1
22	11186	Screw, #8-32 x 1 Zinc	2
23	11201	Hex Nut	4
24	17223	Magnet	2
25	14120	Female Spade Connector	4
26	14134	18 Ga. Black Wire	5
27	14126	16 Ga. Green Wire	1
28	14115	Spade Tongue Connector	1
29	14149	Right Angle Spade Connector	4

ACCESSORIES

NOTICE: All accessories may not be available for all fireplace models.

Purchase these fireplace accessories from your local retailer. If they can not supply these accessories, call DESA's Sales Department at 1-866-672-6040. for information. You can also write to the address listed on the back page of this manual.

BRICK LINER
(Not Shown)

BL32D - Refractory Brick Liner Kit

This brick liner adds a touch of style to your direct-vent fireplace. Complete installation instructions included in this manual.

FLEXIBLE GAS LINE CONNECTOR - GA5081
(Not Shown)

For all models.

PROPANE/NATURAL GAS CONVERSION KIT
(Not Shown)

PCDE-32T - Propane/LP Gas Conversion Kit
NCDE-32T - Natural Gas Conversion Kit

FACE/LOUVER PANEL KIT
(Not Shown)

RLD32 - Rolled Louver Panels - Black

LOUVER TRIM KIT (Rolled Louvers Only)
(Not Shown)

LT32B - Rolled Louver Trim Kit - Brushed Brass
LT32P - Rolled Louver Trim Kit - Platinum
LT32PB - Rolled Louver Trim Kit - Polished Brass

DEFLECTION HOODS
(Not Shown)

HD32 - Hood - Black (2" Brow)

PERIMETER TRIM KIT
(Not Shown)

PT32 - Perimeter Trim Kit - Black
PT32B - Perimeter Trim Kit - Brushed Brass
PT32P - Perimeter Trim Kit - Platinum
PT32PB - Perimeter Trim Kit - Polished Brass

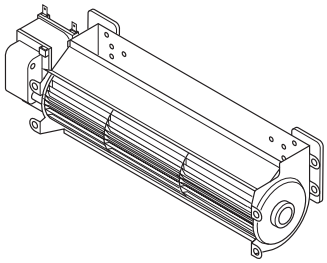

MANUAL BLOWER KIT - BK

Manual variable control blower accessory provides better heat distribution. Complete installation and operation instructions included in this manual.

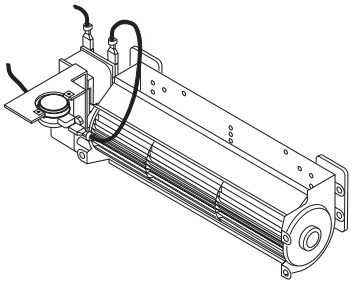

THERMOSTATICALLY- CONTROLLED BLOWER KIT - BKT

Provides better heat distribution. Blower turns off and on automatically, as needed. Complete installation and operation instructions included in this manual.

REMOTE CONTROL KIT - WRC SERIES
Standard On/Off Electronic Remote Control Kit
(Not Shown)

Allows the heater to be turned on and off conveniently.

OWNER'S REGISTRATION FORM

In order to provide better customer service for this and future purchases, we recommend that you register your product with us. You can register online at **www.desatech.com**. If access to our website is not available to you, please complete this Owner's Registration Form and mail to the address on the back of this owner's manual. Please provide the following product information:

Brand: _____ (Comfort Glow, Vanguard, etc.)

Model: _____ (EFP33PR, VTGH33NR, etc.)

Date Purchased: _____ Note: Keep receipt for warranty verification.

Serial Number: _____ 7 or 9 digit number located on product or identification tag.

First Name: _____ Last Name: _____

Address: _____

City: _____ State: _____ Zip: _____ Country: _____

Home Phone: ___(_____)_____-_____

E-Mail: _____

Please answer the following questions to register your product with DESA:

1. Where will the product be used?
   ❍ Living/Family Room ❍ Office/Warehouse ❍ Utility Shed/Outbuilding ❍ Garage ❍ Bedroom ❍ Bathroom ❍ Other
2. If you bought this product yourself, did you plan to purchase this type of product before going into the store? ❍ Yes ❍ No
3. Who selected the product? ❍ Male ❍ Female ❍ Both
4. What is the population of your area? ❍ Under 10,000 ❍ 10,000 to 25,000 ❍ 25,000 to 50,000 ❍ 50,000 to 100,000
   ❍ 100,000 to 250,000 ❍ Over 250,000
5. What is your primary source of heat? ❍ Propane (LP Gas) ❍ Fuel Oil ❍ Wood ❍ Natural Gas ❍ Electric ❍ Other
6. How was the product installed? ❍ Professional Installer ❍ Self ❍ Other
7. Cost of product excluding sales tax? $_____
8. Cost to install product? $_____
9. Type of store where product was purchased? ❍ Hardware ❍ Propane Dealer ❍ Natural Gas/Utility Co. ❍ Home Center/Builder's Supply
   ❍ Fireplace or Hearth Shop ❍ Farm Store ❍ Other
10. What motivated you to buy this product? ❍ Sudden Cold Weather ❍ Replace Older Model ❍ D.I.Y. Home Project
    ❍ Emergency Back-Up Heat ❍ Heater was on Sale ❍ Energy Savings/High Efficiency ❍ Construction Project ❍ Other
11. How did you learn about this product brand? ❍ Advertising ❍ Relative or Friend ❍ Store Display ❍ Other _____
12. Level of Education of Purchaser: ❍ Some High School ❍ Completed High School ❍ Completed College ❍ Completed Graduate School
13. Age of Purchaser: ❍ Under 20 ❍ 20 - 29 ❍ 30 - 39 ❍ 40 - 49 ❍ 50 - 59 ❍ 60 or Over
14. Buyer's total annual household income: ❍ Under $15,000 ❍ $15,000 to $19,999 ❍ $20,000 to $34,999 ❍ $35,000 to $49,999
    ❍ $50,000 to $74,999 ❍ $75,000 to $99,999 ❍ $100,000 and Over
15. Store where product was purchased:
    Name: _____
    City: _____ State: _____
16. In choosing this product, how important were the following:

	Not Important	Somewhat Important	Very Important
Availability	❍	❍	❍
Price	❍	❍	❍
Brand Name	❍	❍	❍
Overall Quality	❍	❍	❍
Heat Output	❍	❍	❍
Made in USA	❍	❍	❍
Warranty	❍	❍	❍
Local Service	❍	❍	❍
Value for Price	❍	❍	❍
Prior Brand Experience	❍	❍	❍
Controls Location	❍	❍	❍
Thermostat, Remote, or Manual Operation	❍	❍	❍
Ease of Operation	❍	❍	❍
Special Features	❍	❍	❍
Salesperson's Recommendation	❍	❍	❍
Friend/Relative's Recommendation	❍	❍	❍
Portability	❍	❍	❍
Quiet Operation	❍	❍	❍

TAPE

Postage
Required

2701 Industrial Drive
P.O. Box 90004
Bowling Green, KY 42102-9004

TAPE

NOTES

WARRANTY INFORMATION

KEEP THIS WARRANTY

Model _____

Serial No. _____

Date Purchased _____

Always specify model and serial numbers when communicating with the factory.

We reserve the right to amend these specifications at any time without notice. The only warranty applicable is our standard written warranty. We make no other warranty, expressed or implied.

LIMITED WARRANTY
DIRECT-VENT FIREPLACE

DESA warrants this product to be free from defects in materials and components for two (2) years from the date of first purchase, provided that the product has been properly installed, operated and maintained in accordance with all applicable instructions. To make a claim under this warranty the Bill of Sale or cancelled check must be presented.

This warranty is extended only to the original retail purchaser. This warranty covers the cost of part(s) required to restore this heater to proper operating condition and an allowance for labor when provided by a DESA Authorized Service Center. Warranty part(s) MUST be obtained through authorized retailers of this product and/or DESA who will provide original factory replacement parts. Failure to use original factory replacement parts voids this warranty. The heater MUST be installed by a qualified installer in accordance with all local codes and instructions furnished with the unit.

This warranty does not apply to parts that are not in original condition because of normal wear and tear or parts that fail or become damaged as a result of misuse, accidents, lack of proper maintenance or defects caused by improper installation. Travel, diagnostic cost, labor, transportation and any and all such other costs related to repairing a defective heater will be the responsibility of the owner.

TO THE FULL EXTENT ALLOWED BY THE LAW OF THE JURISDICTION THAT GOVERNS THE SALE OF THE PRODUCT; THIS EXPRESS WARRANTY EXCLUDES ANY AND ALL OTHER EXPRESSED WARRANTIES AND LIMITS THE DURATION OF ANY AND ALL IMPLIED WARRANTIES, INCLUDING WARRANTIES OF MERCHANTABILITY AND FITNESS FOR A PARTICULAR PURPOSE TO TWO (2) YEARS ON ALL COMPONENTS FROM THE DATE OF FIRST PURCHASE; AND DESA'S LIABILITY IS HEREBY LIMITED TO THE PURCHASE PRICE OF THE PRODUCT AND DESA SHALL NOT BE LIABLE FOR ANY OTHER DAMAGES WHATSOEVER INCLUDING INDIRECT, INCIDENTAL OR CONSEQUENTIAL DAMAGES.

Some states do not allow a limitation on how long an implied warranty lasts or an exclusion or limitation of incidental or consequential damages, so the above limitation on implied warranties or exclusion or limitation on damages may not apply to you.

This warranty gives you specific legal rights and you may also have other rights that vary from state to state.

For information about this warranty write:

DESA™
2701 Industrial Drive
P.O. Box 90004
Bowling Green, KY 42102-9004
www.desatech.com

116647 01

NOT A UPC

116647-01
Rev. A
03/05